Job No. 1718-07-014

KAPUAIWA BUILDING
SEPARATE STORM DRAIN AND BASEMENT SANITARY SEWER SYSTEMS

HONOLULU, OAHU, HAWAII

(TMK: 2-1-025:003)

PREPARED FOR:

THE JUDICIARY, STATE OF HAWAII

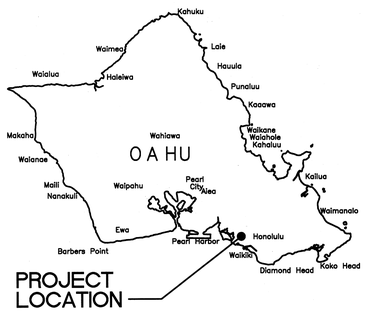

VICINITY MAP
NOT TO SCALE

LIST OF CONSULTANTS:

CIVIL: THE LIMTIACO CONSULTING GROUP
1622 KANAKANUI STREET
HONOLULU, HI 96817

STRUCTURAL: NAGAMINE OKAWA ENGINEERS INC.
1003 BISHOP STREET, SUITE 2025
HONOLULU, HI 96813

ELECTRICAL: RONALD N.S. HO AND ASSOCIATES, INC.
2153 N. KING STREET, SUITE 201
HONOLULU, HI 96819

HAZARDOUS MATERIALS: ENVIROSERVICES AND TRAINING CENTER
505 WARD AVE, SUITE 202
HONOLULU, HI 96814

LOCATION MAP

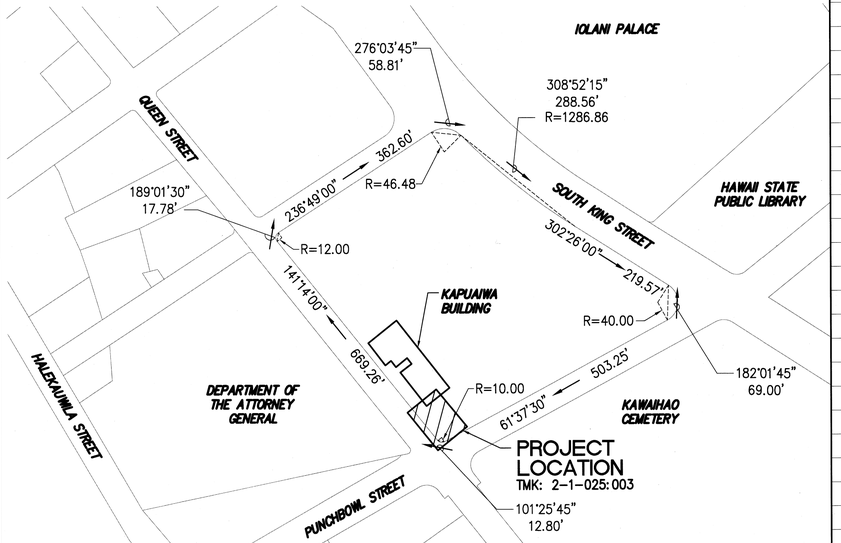

LOCATION MAP
SCALE: 1" = 150'
(TMK: 2-1-025:003)

DRAWING INDEX

SHT. No.	DWG. No.	DRAWING TITLE
1	G000	TITLE SHEET AND APPROVALS
2	G001	NOTES 1
3	G002	NOTES 2
4	G003	NOTES 3 AND ABBREVIATIONS
CIVIL		
5	ESCP1	EROSION AND SEDIMENT CONTROL NOTES
6	ESCP2	EROSION AND SEDIMENT CONTROL DETAILS
7	ESCP3	EROSION AND SEDIMENT CONTROL PLAN
8	C001	DEMOLITION PLAN
9	C002	SITE PLAN
10	C003	UTILITY PROFILES
11	C004	STORMWATER PUMP STATION DEMOLITION PLAN & SECTION
12	C005	STORMWATER PUMP STATION DETAIL
13	C006	PACKAGE SEWER PUMP STATION DETAIL
14	C007	DETAILS 1
15	C008	BORING LOG DATA
16	TC001	TRAFFIC CONTROL PLAN
STRUCTURAL		
17	S001	STRUCTURAL NOTES AND TYPICAL DETAILS
18	S002	SECTIONS
ELECTRICAL		
19	E001	ELECTRICAL SYMBOLS AND GENERAL NOTES
20	E002	DUCT SECTION DETAILS AND REQUIREMENTS
21	E003	ELECTRICAL SITE PLAN
22	E004	PUMP STATION ELECTRICAL PLAN
23	E005	PANEL SCHEDULE AND ONE-LINE DIAGRAM
24	E006	MISCELLANEOUS ELECTRICAL DETAILS

APPROVED

Rodney A. Maile 1-14-20
ADMINISTRATIVE DIRECTOR OF THE COURTS — DATE
THE JUDICIARY
STATE OF HAWAII

REVISION NO.	SYM.	DESCRIPTION	SHT.___ OF___	DATE	APPROVED: ADMINISTRATIVE DIRECTOR OF COURTS

JASON H. LAU
LICENSED PROFESSIONAL ENGINEER
NO. 9360-C
HAWAII USA
EXPIRES: 4/30/20
THIS WORK WAS PREPARED BY ME OR UNDER MY SUPERVISION AND CONSTRUCTION OF THIS PROJECT WILL BE UNDER MY OBSERVATION
SIGNATURE

THE JUDICIARY
STATE OF HAWAI'I

KAPUAIWA BUILDING
SEPARATE STORM DRAIN AND BASEMENT SANITARY SEWER SYSTEMS
HONOLULU, OAHU, HAWAII

TITLE SHEET AND APPROVALS

DESIGNED BY: JK/KT	CHECKED BY: JL/JK	JUDICIARY PROJECT NO. 1718-07-014	DRAWING NO. G000
DRAWN BY: HH/SA/KT	APPROVED BY: JL	DATE NOV 2019	SHEET 1 OF 24 SHTS
SCALE: AS SHOWN			

FILE ____ DRAWER ____ FOLDER ____

L:\1. PROJECTS\03 - MISC\10313 - KAPUAIWA DRAINAGE DESIGN\DRAWINGS\TITLE - BUILDING PERMIT.DWG 1/8/2020 11:29 AM

DPP/CP-A2019-03-1124

KAPUAIWA BUILDING: SEPARATE STORM DRAIN AND BASEMENT SANITARY SEWER SYSTEMS

CONSTRUCTION NOTES

1. ALL CONSTRUCTION WORK SHALL CONFORM TO THE STANDARD DETAILS FOR PUBLIC WORKS CONSTRUCTION, SEPTEMBER 1984, AND STANDARD SPECIFICATIONS FOR PUBLIC WORKS CONSTRUCTION, SEPTEMBER 1986, AS AMENDED, OF THE DEPARTMENT OF PUBLIC WORKS, CITY & COUNTY OF HONOLULU AND THE COUNTIES OF KAUAI, MAUI, AND HAWAII.

2. ALL APPLICABLE CONSTRUCTION WORK SHALL ALSO BE IN ACCORDANCE WITH THE STATE OF HAWAII'S "HAWAII REVISED STATUTES" SECTION 103-50 FOR CONFORMANCE WITH ACCESSIBILITY GUIDELINES. ALL REQUIREMENTS OF THE BUILDING, PLUMBING, AND ELECTRICAL CODES OF THE CITY & COUNTY OF HONOLULU, STATE OF HAWAII REGULATIONS, AND CONTRACT PLANS AND SPECIFICATIONS.

3. THE UNDERGROUND PIPES, CABLES OR DUCTLINES KNOWN TO EXIST BY THE ENGINEER FROM HIS SEARCH OF RECORDS ARE INDICATED ON THE PLANS. THE CONTRACTOR SHALL VERIFY THE LOCATIONS AND DEPTHS OF THE FACILITIES AND EXERCISE PROPER CARE IN EXCAVATING IN THE AREA. WHEREVER CONNECTIONS OF NEW UTILITIES TO EXISTING UTILITIES ARE SHOWN ON THE PLANS, THE CONTRACTOR SHALL EXPOSE THE EXISTING LINES AT THE PROPOSED CONNECTIONS TO VERIFY THEIR LOCATIONS AND DEPTHS PRIOR TO EXCAVATION FOR THE NEW LINES.

4. NO CONTRACTOR SHALL PERFORM ANY CONSTRUCTION OPERATION SO AS TO CAUSE FALLING ROCKS, SOIL OR DEBRIS IN ANY FORM TO FALL, SLIDE OR FLOW INTO EXISTING CITY DRAINAGE SYSTEMS, OR ADJOINING PROPERTIES, STREETS OR NATURAL WATERCOURSES. SHOULD SUCH VIOLATIONS OCCUR, THE CONTRACTOR MAY BE CITED AND THE CONTRACTOR SHALL IMMEDIATELY MAKE ALL REMEDIAL ACTIONS NECESSARY.

5. FOR NON-CITY PROJECTS, THE CONTRACTOR SHALL NOTIFY THE CIVIL ENGINEERING BRANCH D.P.P. AT 768-8084 TO ARRANGE FOR INSPECTIONAL SERVICES AND SUBMIT TWO (2) SETS OF APPROVED CONSTRUCTION PLANS SEVEN (7) DAYS PRIOR TO COMMENCEMENT OF CONSTRUCTION WORK. FOR CITY PROJECTS, THE CONTRACTOR SHALL COORDINATE INSPECTIONAL SERVICES WITH THE RESPONSIBLE CITY AGENCY.

6. THE GENERAL CONTRACTOR/OWNER OF THE PROJECT SHALL BE RESPONSIBLE FOR CONFORMANCE WITH APPLICABLE PROVISIONS OF THE HAWAII ADMINISTRATIVE RULES, TITLE 11, CHAPTER 54, "WATER QUALITY STANDARDS," TITLE 11, CHAPTER 55, "WATER POLLUTION CONTROL", AS WELL AS CHAPTER 14 OF THE REVISED ORDINANCES OF HONOLULU, AS AMENDED. BEST MANAGEMENT PRACTICES SHALL BE EMPLOYED AT ALL TIMES DURING CONSTRUCTION.

7. THE GENERAL CONTRACTOR/OWNER OF THE PROJECT SHALL OBTAIN NATIONAL POLLUTANT DISCHARGE ELIMINATION SYSTEM (NPDES) PERMIT COVERAGE(S) FOR THE FOLLOWING:

   A. STORM WATER DISCHARGES ASSOCIATED WITH CONSTRUCTION ACTIVITIES THAT DISTURB ONE (1) ACRE OR MORE, AND
   B. DISCHARGES OF HYDROTESTING EFFLUENT, DEWATERING EFFLUENT, AND WELL DRILLING EFFLUENT TO STATE WATERS.

   IN ACCORDANCE WITH STATE LAW, ALL DISCHARGES RELATED TO PROJECT CONSTRUCTION OR OPERATIONS ARE REQUIRED TO COMPLY WITH STATE WATER QUALITY STANDARDS (HAWAII ADMINISTRATIVE RULES, CHAPTER 11-54). BEST MANAGEMENT PRACTICES SHALL BE USED TO MINIMIZE OR PREVENT THE DISCHARGE OF SEDIMENT, DEBRIS, AND OTHER POLLUTANTS TO STATE WATERS. PERMIT COVERAGE IS AVAILABLE FROM THE DEPARTMENT OF HEALTH, CLEAN WATER BRANCH AT http://health.hawaii.gov/cwb. THE OWNER/CONTRACTOR IS RESPONSIBLE FOR OBTAINING OTHER FEDERAL, STATE, OR LOCAL AUTHORIZATIONS AS REQUIRED BY LAW.

8. CONFINED SPACE

   FOR ENTRY BY PERSONNEL, INCLUDING INSPECTORS AND REPRESENTATIVES, INTO A PERMIT REQUIRED CONFINED SPACE AS DEFINED IN 29 CFR PART 1910.146(b), THE CONTRACTOR SHALL BE RESPONSIBLE FOR PROVIDING:

   C. ALL SAFETY EQUIPMENT REQUIRED BY THE CONFINED SPACE REGULATIONS APPLICABLE TO ALL PARTIES OTHER THAN THE CONSTRUCTION INDUSTRY, TO INCLUDE, BUT NOT LIMITED TO THE FOLLOWING:

      a. FULL BODY HARNESSES FOR UP TO TWO PERSONNEL.
      b. LIFELINE AND ASSOCIATE CLIPS.
      c. INGRESS/EGRESS AND FALL PROTECTION EQUIPMENT.
      d. TWO-WAY RADIOS (WALKIE-TALKIES) IF OUT OF LINE-OF-SIGHT.
      e. EMERGENCY (ESCAPE) RESPIRATOR (10 MINUTE DURATION).
      f. CELLULAR TELEPHONE TO CALL FOR EMERGENCY ASSISTANCE.
      g. CONTINUOUS GAS DETECTOR (CALIBRATED) TO MEASURE OXYGEN, HYDROGEN SULFIDE, CARBON MONOXIDE AND FLAMMABLES (CAPABLE OF MONITORING AT A DISTANCE AT LEAST 20 FEET AWAY).
      h. PERSONAL MULTI-GAS DETECTOR TO BE CARRIED BY INSPECTOR.

   II. CONTINUOUS FORCED AIR VENTILATION ADEQUATE TO PROVIDE SAFE ENTRY CONDITIONS.

   III. ONE ATTENDANT/RESCUE PERSONNEL TOPSIDE (TWO, IF CONDITIONS WARRANT IT).

9. PURSUANT TO CHAPTER 6E, HRS, IN THE EVENT ANY ARTIFACTS OR HUMAN REMAINS ARE UNCOVERED DURING CONSTRUCTION OPERATIONS, THE CONTRACTOR SHALL IMMEDIATELY SUSPEND WORK AND NOTIFY THE HONOLULU POLICE DEPARTMENT, THE STATE DEPARTMENT OF LAND AND NATURAL RESOURCES-HISTORIC PRESERVATION DIVISION(692-8015). IN ADDITION, FOR NON-CITY PROJECTS, THE CONTRACTOR SHALL INFORM THE CIVIL ENGINEERING BRANCH, DEPARTMENT OF PLANNING AND PERMITTING (768-8084); AND FOR CITY PROJECTS NOTIFY THE RESPONSIBLE CITY AGENCY.

10. FOR BENCH MARK, SEE SHEET C002.

TRENCHING NOTES:

1. PERFORM ALL WORK IN A NEAT AND WORKMANLIKE MANNER AND IN CONFORMITY WITH THE PROVISIONS OF CHAPTER 14, REVISED ORDINANCE OF HONOLULU 1990, AS AMENDED.

2. BEFORE PAVEMENT RESTORATION MAY COMMENCE, CONTRACTOR TO NOTIFY THE DIRECTOR OR AUTHORIZED REPRESENTATIVE AND FURNISH DATA ON TESTS PERFORMED UNDER THE SUPERVISION OF A REGISTERED CIVIL ENGINEER SUBSTANTIATING THAT THE BACKFILL HAS BEEN COMPACTED TO THE DENSITY SPECIFIED IN THE STANDARD SPECIFICATIONS FOR PUBLIC WORKS CONSTRUCTION FOR ALL TRENCHES THAT ARE OVER 2 FEET IN DEPTH IN MAJOR AND SECONDARY STREETS AND FOR ALL TRENCHES OVER FIFTY FEET IN LENGTH AND OVER 2 FEET IN DEPTH IN MINOR AND DEAD END STREETS. THE DIRECTOR MAY ALSO REQUIRE COMPACTION TESTS OF BACKFILL FOR HOLES AND FOR TRENCHES OF LESS THAN 2 FEET IN DEPTH AND ADDITIONAL COMPACTION TESTS ON TRENCHES FOR WHICH THE PERMITTEE HAS FURNISHED TEST DATA.

3. CONTACT THE DEPARTMENT OF PLANNING AND PERMITTING, SITE DEVELOPMENT DIVISION, CIVIL ENGINEERING BRANCH, PERMITTING AND INSPECTION SECTION TO SCHEDULE A FINAL INSPECTION OF PAVEMENT RESTORATION WORK. THE BOND FILED WITH THE CITY WILL BE RELEASED ONE (1) YEAR AFTER THE DATE OF THE FINAL INSPECTION. (PHONE NUMBER: 768-8084).

4. PROVIDE SHORING AND TEMPORARY TRENCH COVERS ADEQUATE TO SUPPORT LEGAL TRAFFIC LOADS.

5. UNDERTAKE, FOR A PERIOD OF ONE (1) YEAR AFTER THE SATISFACTORY COMPLETION AND APPROVAL OF RESTORATION WORK, ANY NECESSARY REPAIRS TO THE RESTORED WORK OR FACILITIES DISTURBED AND/OR BY THE WORK PERFORMED UNDER THIS PERMIT.

6. REMOVE, RELOCATE, REPLACE, RECONSTRUCT OR ADJUST, AT THE CONTRACTOR'S EXPENSE, ANY FACILITIES THAT MAY EXIST ON OR UNDER THE RIGHT-OF-WAY WHENEVER AND AS OFTEN AS MAY BE REQUIRED BY THE DIRECTOR OR AN AUTHORIZED REPRESENTATIVE IN ORDER TO UNDERTAKE THE CONSTRUCTION, RECONSTRUCTION OR MAINTENANCE OF SAID RIGHT-OF-WAY.

7. KEEP ALL FACILITIES INSTALLED UNDER THE SAID PERMIT IN GOOD REPAIR SO THAT THE PRESENCE OF SUCH FACILITY ON OR UNDER THE RIGHT-OF-WAY WILL IN NO WAY IMPAIR THE USE OR USEFULNESS OF ANY IMPROVEMENT WHICH MAY NOW EXIST OR HEREAFTER COME INTO EXISTENCE.

8. PROCURE, AT HIS/HER OWN EXPENSE, AND KEEP IN FORCE AT ALL TIMES, INSURANCE NAMING THE CITY AS AN ADDITIONAL INSURED AS REQUIRED BY CHAPTER 14 AFORESAID AND SUPPLY EVIDENCE SATISFACTORY TO THE CITY THAT THE REQUIRED INSURANCE HAS BEEN PROCURED AND IS IN FORCE PRIOR TO ISSUANCE OF THE PERMIT.

9. KEEP A COPY OF PERMIT AND A COPY OF THE PLANS IN THE HANDS OF THE WORKING CREW FOR EXHIBIT UPON REQUEST OF ANY AUTHORIZED REPRESENTATIVE OF THE CITY.

10. SUBMIT AS-BUILT DRAWINGS TO THE DIRECTOR SHOWING THE ACTUAL CONSTRUCTION PERFORMED. AS-BUILT DRAWINGS ARE NOT REQUIRED FOR EMERGENCY REPAIRS AND SERVICE CONNECTIONS.

12. THE PERMIT FEE IS NOT REFUNDABLE UNDER ANY CONDITION.

PUBLIC TRANSIT DIVISION, DTS NOTE:

1. THIS PROJECT WILL AFFECT BUS OPERATIONS, BUS ROUTES, BUS STOPS, AND PARA-TRANSIT OPERATIONS. AT LEAST 2 WEEKS PRIOR TO CONSTRUCTION, THE CONTRACTOR SHALL PROVIDE NOTIFICATION OF THE SCOPE OF WORK, LOCATION, DETOUR, PROPOSED CLOSURE OF ANY STREET, TRAFFIC LANE, SIDEWALK, OR BUS STOP AND DURATION OF PROJECT TO:

   DEPARTMENT OF TRANSPORTATION SERVICES, PUBLIC TRANSIT DIVISION:
   768-8396 AND THEBUSSTOP@HONOLULU.GOV

   OAHU TRANSIT SERVICES:
   BUS OPERATIONS: 848-4571 AND 848-4565 AND
   FIELD_OPERATION_MGR@THEBUS.ORG
   PARA-TRANSIT OPERATIONS 454-5006 AND 454-5083.

SEWER NOTES:

1. ALL SEWER CONSTRUCTION SHALL BE PERFORMED IN ACCORDANCE WITH THE STANDARD SPECIFICATIONS FOR PUBLIC WORKS CONSTRUCTION, SEPTEMBER 1986, WASTEWATER SYSTEM STANDARD DETAILS, JULY 2017 OF THE CITY AND COUNTY OF HONOLULU, THE REVISED ORDINANCES OF HONOLULU, 1990, AS AMENDED, AND THE WASTEWATER SYSTEM DESIGN STANDARDS OF THE DEPARTMENT OF ENVIRONMENTAL SERVICES, VOL. 1, JULY 2017, AND THE CONTRACT PLANS AND SPECIFICATIONS.

2. IN THE EVENT THAT ANY CHANGE IN ALIGNMENT OR GRADE FOR THE PROPOSED SEWERS ARE REQUIRED DUE TO UNFORESEEN CONFLICTS WITH OTHER UTILITIES, THE ENGINEER SHALL BE NOTIFIED IMMEDIATELY.

3. THE UNDERGROUND PIPES, CABLES OR DUCTLINES KNOWN TO EXIST BY THE ENGINEER FROM THEIR RESEARCH OF RECORDS ARE INDICATED ON THE PLANS. THE CONTRACTOR SHALL VERIFY THE LOCATION AND DEPTH OF THE FACILITIES AND EXERCISE PROPER CARE IN EXCAVATING THE AREA. THE CONTRACTOR SHALL BE RESPONSIBLE AND SHALL PAY FOR ALL DAMAGED UTILITIES.

4. THE CONTRACTOR SHALL BE RESPONSIBLE FOR MAINTAINING CONTINUOUS SEWER SERVICE TO ALL AFFECTED AREAS DURING CONSTRUCTION.

5. THE CONTRACTOR SHALL BE RESPONSIBLE FOR ANY SEWAGE SPILLS CAUSED DURING CONSTRUCTION. THE CONTRACTOR SHALL NOTIFY THE STATE DEPARTMENT OF HEALTH AND UTILIZE APPROPRIATE SAMPLING AND ANALYZING PROCEDURES. THE CONTRACTOR SHALL BE RESPONSIBLE FOR ALL PUBLIC NOTIFICATIONS AND PRESS RELEASES.

6. CRUSHED ROCK CRADLE IS PERMITTED WHERE SOIL IS STABLE. IN AREAS OF UNSTABLE SOIL, THE MAKER OF THE PLANS AND THE CONSTRUCTION ENGINEER WILL DETERMINE THE PIPE SUPPORT REQUIRED.

7. MINIMUM SLOPE FOR SEWER LATERALS SHALL BE 1.00% UNLESS OTHERWISE NOTED.

8. CONFINED SPACE

   FOR ENTRY BY PERSONNEL, INCLUDING INSPECTORS AND REPRESENTATIVES, INTO A PERMIT REQUIRED CONFINED SPACE AS DEFINED IN 29 CFR PART 1910.146(b), THE CONTRACTOR SHALL BE RESPONSIBLE FOR PROVIDING:

   I. ALL SAFETY EQUIPMENT REQUIRED BY THE CONFINED SPACE REGULATIONS APPLICABLE TO ALL PARTIES OTHER THAN THE CONSTRUCTION INDUSTRY, TO INCLUDE, BUT NOT LIMITED TO THE FOLLOWING:

      a. FULL BODY HARNESSES FOR UP TO TWO PERSONNEL.
      b. LIFELINE AND ASSOCIATE CLIPS.
      c. INGRESS/EGRESS AND FALL PROTECTION EQUIPMENT.
      d. TWO-WAY RADIOS (WALKIE-TALKIES) IF OUT OF LINE-OF-SIGHT.
      e. EMERGENCY (ESCAPE) RESPIRATOR (10 MINUTE DURATION).
      f. CELLULAR TELEPHONE TO CALL FOR EMERGENCY ASSISTANCE.
      g. CONTINUOUS GAS DETECTOR (CALIBRATED) TO MEASURE OXYGEN, HYDROGEN SULFIDE, CARBON MONOXIDE AND FLAMMABLES (CAPABLE OF MONITORING AT A DISTANCE AT LEAST 20 FEET AWAY).
      h. PERSONAL MULTI-GAS DETECTOR TO BE CARRIED BY INSPECTOR.

   II. CONTINUOUS FORCED AIR VENTILATION ADEQUATE TO PROVIDE SAFE ENTRY CONDITIONS.

   III. ONE ATTENDANT/RESCUE PERSONNEL TOPSIDE (TWO, IF CONDITIONS WARRANT IT).

WATER NOTES:

1. UNLESS OTHERWISE SPECIFIED, ALL MATERIALS AND CONSTRUCTION OF WATER SYSTEM FACILITIES AND APPURTENANCES SHALL BE IN ACCORDANCE WITH THE CITY AND COUNTY OF HONOLULU BOARD OF WATER SUPPLY'S "WATER SYSTEM STANDARDS", DATED 2002, THE "WATER SYSTEM EXTERNAL CORROSION CONTROL STANDARDS", VOLUME 3, DATED 1991, AND ALL SUBSEQUENT AMENDMENTS AND ADDITIONS.

2. ALL PLANS APPROVED BY THE BOARD OF WATER SUPPLY ARE BASED SOLELY ON THE ADEQUACY OF THE WATER SUPPLY.

3. THE CONTRACTOR SHALL NOTIFY BWS CAPITAL PROJECTS DIVISION, CONSTRUCTION SECTION IN WRITING AND SUBMIT SIX (6) SETS OF APPROVED CONSTRUCTION PLANS ONE WEEK PRIOR TO COMMENCING WORK ON THE WATER SYSTEM.

WATER NOTES (CONT.):

4. THE EXISTENCE AND LOCATION OF UNDERGROUND UTILITIES AND STRUCTURES AS SHOWN ON THE PLANS ARE FROM THE LATEST AVAILABLE DATA BUT IS NOT GUARANTEED AS TO THE ACCURACY OF ENCOUNTERING OF OTHER OBSTACLES DURING THE COURSE OF THE WORK. THE CONTRACTOR SHALL BE RESPONSIBLE AND PAY FOR ALL DAMAGES TO EXISTING UTILITIES. THE CONTRACTOR SHALL NOT ASSUME THAT WHERE NO UTILITIES ARE SHOWN NONE EXIST.

5. RE-APPROVAL SHALL BE REQUIRED IF THIS PROJECT IS NOT UNDER CONSTRUCTION WITHIN A PERIOD OF TWO (2) YEARS.

6. THE CONTRACTOR SHALL BE RESPONSIBLE FOR THE PROTECTION OF ALL WATER LINES DURING CONSTRUCTION. THE CONTRACTOR SHALL BE ESPECIALLY CAREFUL WHEN EXCAVATING BEHIND WATER LINES, TEES, AND BENDS WHEREVER THERE IS A POSSIBILITY OF WATER LINE MOVEMENT DUE TO THE REMOVAL OF THE SUPPORTING EARTH BEYOND THE EXISTING REACTION BLOCKS. THE CONTRACTOR SHALL TAKE WHATEVER MEASURES NECESSARY TO PROTECT THE WATER LINES, SUCH AS CONSTRUCTING SPECIAL REACTION BLOCKS (WITH BWS APPROVAL) AND/OR MODIFYING HIS CONSTRUCTION METHOD.

7. PRIOR TO ANY EXCAVATING, THE CONTRACTOR SHALL VERIFY IN THE FIELD THE LOCATION OF EXISTING WATER MAINS AND APPURTENANCES.

8. THE CONTRACTOR SHALL VERIFY ALL EXISTING SERVICE LATERAL LOCATIONS WHETHER SHOWN OR NOT SHOWN ON PLANS PRIOR TO COMMENCING WITH ANY OF THE WORK AND SHALL NOT ASSUME THAT WHERE NO SERVICES ARE SHOWN NONE EXIST.

MECHANICAL/ELECTRICAL DIVISION NOTES:

1. THE CONTRACTOR SHALL NOTIFY THE JOINT POLE COMMITTEE TWO (2) WEEKS IN ADVANCE OF ANY RELOCATION OF UTILITY POLE(S) THAT MAY BE NECESSARY.

2. THE CONTRACTOR SHALL NOTIFY THE MECHANICAL/ELECTRICAL DIVISION, DEPARTMENT OF DESIGN AND CONSTRUCTION, THREE (3) WORKING DAYS PRIOR TO COMMENCING WORK ON THE STREET LIGHTING SYSTEM. (PHONE: 768-8431)

3. THE STREET LIGHTING SYSTEM SHALL BE KEPT OPERATIONAL DURING CONSTRUCTION. ANY RELOCATION REQUIRED SHALL BE APPROVED BY THE MECHANICAL / ELECTRICAL DIVISION, DEPARTMENT OF DESIGN AND CONSTRUCTION, AND PAID FOR BY THE CONTRACTOR.

4. THE LOCATIONS OF THE EXISTING UNDERGROUND STREET LIGHT FACILITIES SHOWN ON THE PLANS ARE FROM EXISTING PLANS AND ARE APPROXIMATE ONLY. THE CONTRACTOR SHALL EXERCISE CAUTION WHEN CONSTRUCTION CROSSES OR IS IN CLOSE PROXIMITY TO THE EXISTING STREET LIGHT FACILITIES. THE CONTRACTOR SHALL BE RESPONSIBLE FOR ANY DAMAGES TO THE EXISTING STREET LIGHTING FACILITIES. ANY AND ALL DAMAGES TO THESE FACILITIES SHALL BE REPAIRED BY THE CONTRACTOR AT HIS COST IN ACCORDANCE WITH THE REQUIREMENTS OF THE CITY AND COUNTY OF HONOLULU.

5. THE CONTRACTOR SHALL BE RESPONSIBLE FOR ANY DAMAGES TO THE CITY'S EXISTING COMMUNICATIONS FIBER OPTIC CABLE SYSTEM. ANY AND ALL DAMAGES TO THESE FACILITIES SHALL BE REPAIRED BY THE CONTRACTOR AT HIS COST IN ACCORDANCE WITH THE REQUIREMENTS OF THE CITY AND COUNTY OF HONOLULU.

REVISION NO.	SYM.	DESCRIPTION	SHT.___ OF___	DATE	APPROVED: ADMINISTRATIVE DIRECTOR OF COURTS

JASON H. LAU
LICENSED PROFESSIONAL ENGINEER
NO. 9360-C
HAWAII USA

EXPIRES: 4/30/20

THIS WORK WAS PREPARED BY ME OR UNDER MY SUPERVISION AND CONSTRUCTION OF THIS PROJECT WILL BE UNDER MY OBSERVATION

SIGNATURE

THE JUDICIARY
STATE OF HAWAI'I

KAPUAIWA BUILDING
SEPARATE STORM DRAIN AND BASEMENT
SANITARY SEWER SYSTEMS
HONOLULU, OAHU, HAWAII

NOTES 1

DESIGNED BY: JK/KT	CHECKED BY: JL/JK	JUDICIARY PROJECT NO. 1718-07-014	DRAWING NO. G001
DRAWN BY: HH/SA/KT	APPROVED BY: JL	DATE NOV 2019	SHEET 2 OF 24 SHTS
SCALE: AS SHOWN			

FILE _____ DRAWER _____ FOLDER _____

L:\1. PROJECTS\03 - WISC\10313 - KAPUAIWA DRAINAGE DESIGN\DRAWINGS\NOTES - BUILDING PERMIT.DWG 11/25/2019 6:21 PM

TRAFFIC NOTES FOR WORK ON CITY AND COUNTY STREETS:

1. A PERMIT SHALL BE OBTAINED FROM THE DEPARTMENT OF TRANSPORTATION SERVICES BEFORE WORK ON ANY PORTION OF A PUBLIC STREET OR HIGHWAY MAY BEGIN. CONSTRUCTION TRAFFIC CONTROL PLANS APPROVED BY THE DEPARTMENT OF TRANSPORTATION SERVICES AND/OR THE DEPARTMENT OF PLANNING AND PERMITTING MUST BE PROVIDED WHEN APPLYING FOR THE PERMIT.

2. THE CONTRACTOR SHALL PROVIDE, INSTALL, AND MAINTAIN ALL NECESSARY SIGNS AND OTHER PROTECTIVE FACILITIES, WHICH SHALL CONFORM WITH THE "HAWAII ADMINISTRATION RULES GOVERNING THE USE OF TRAFFIC CONTROL DEVICES AT WORK SITES ON OR ADJACENT TO PUBLIC STREET AND HIGHWAYS" ADOPTED BY THE DIRECTOR OF TRANSPORTATION, AND THE CURRENT U.S. FEDERAL HIGHWAY ADMINISTRATION'S "PART VI OF THE MANUAL ON UNIFORM TRAFFIC CONTROL DEVICES – STANDARDS AND GUIDES FOR TRAFFIC CONTROLS FOR STREET AND HIGHWAY CONSTRUCTION, MAINTENANCE, UTILITY, AND INCIDENT MANAGEMENT OPERATIONS."

3. WORK ON ANY CITY STREET AREA MAY BE PERFORMED ONLY BETWEEN THE HOURS OF 8:30 A.M. TO 3:30 P.M., MONDAY THROUGH FRIDAY, UNLESS OTHERWISE PERMITTED BY THE DEPARTMENT OF TRANSPORTATION SERVICES.

4. FOR EXISTING ROADWAYS ONLY: DURING WORKING HOURS, THE CONTRACTOR SHALL PROVIDE FOR THROUGH TRAFFIC. DURING NON–WORKING HOURS, ALL TRENCHES SHALL BE COVERED WITH A SAFE NON–SKID BRIDGING MATERIAL AND ALL LANES SHALL BE OPEN TO TRAFFIC.

5. AS REQUIRED BY THE DEPARTMENT OF TRANSPORTATION SERVICES, THE CONTRACTOR SHALL PROVIDE OFF–DUTY POLICE OFFICERS TO CONTROL THE FLOW OF TRAFFIC.

6. DRIVEWAYS SHALL BE KEPT OPEN UNLESS THE OWNERS OF THE PROPERTY USING THESE RIGHTS–OF–WAY ARE OTHERWISE PROVIDED FOR SATISFACTORILY.

7. CONTRACTOR SHALL REFERENCE TO THE APPROVAL OF THE DEPARTMENT OF TRANSPORTATION SERVICES AND THE DEPARTMENT OF PLANNING AND PERMITTING, ALL EXISTING TRAFFIC SIGNS, POSTS AND PAVEMENT MARKINGS PRIOR TO THE COMMENCEMENT OF CONSTRUCTION. THE CONTRACTOR SHALL REPLACE OR REPAIR ALL TRAFFIC SIGNS, POSTS AND TRAFFIC MARKINGS DISTURBED BY HIS/HER ACTIVITIES.

8. THE CONTRACTOR SHALL NOTIFY THE DEPARTMENT OF PLANNING AND PERMITTING, AT 768–8084 ONE (1) WEEK PRIOR TO ANY WORK TO BE DONE ON SIGNS, POSTS, AND PAVEMENT MARKINGS.

9. NO EQUIPMENT SHALL BE STORED WITHIN STREET RIGHTS–OF–WAY EXCEPT AT LOCATIONS DESIGNATED IN WRITING APPROVED BY THE DEPARTMENT OF TRANSPORTATION SERVICES.

10. THE STATE JUDICIARY SERVICES SHALL ENSURE THAT THE CONTRACTOR INSTALLS THE CONSTRUCTION TRAFFIC CONTROL DEVICES IN ACCORDANCE WITH THE MUTCD AND HAWAII ADMINISTRATION RULES AS SPECIFIED IN TRAFFIC NOTE #2.

TRAFFIC SIGNAL AND TECHNOLOGY DIVISION NOTES

1. THE CONTRACTOR SHALL NOTIFY THE TRAFFIC SIGNAL AND TECHNOLOGY DIVISION, DEPARTMENT OF TRANSPORTATION SERVICES (768–8387) THREE (3) WORKING DAYS PRIOR TO COMMENCING WORK ON THE TRAFFIC SIGNAL SYSTEM.

2. THE TRAFFIC SIGNAL SYSTEM SHALL BE KEPT OPERATIONAL DURING CONSTRUCTION. ANY RELOCATION REQUIRED SHALL BE APPROVED BY THE TRAFFIC SIGNAL AND TECHNOLOGY DIVISION, DEPARTMENT OF TRANSPORTATION SERVICES AND PAID FOR BY THE CONTRACTOR.

3. THE CONTRACTOR SHALL BE RESPONSIBLE FOR ANY DAMAGES TO THE EXISTING TRAFFIC SIGNAL FACILITIES, INCLUDING BUT NOT LIMITED TO THE TRAFFIC SIGNAL FIBER OPTIC CABLE SYSTEM, AND INTERCONNECT SYSTEM. ANY AND ALL DAMAGES TO THESE FACILITIES SHALL BE REPAIRED BY THE CONTRACTOR AT THEIR COST IN ACCORDANCE WITH THE REQUIREMENTS OF THE TRAFFIC SIGNALS AND TECHNOLOGY DIVISION, DEPARTMENT OF TRANSPORTATION SERVICES.

ARCHAEOLOGICAL NOTES:

1. SHOULD ARCHAEOLOGICAL ARTIFACTS BE ENCOUNTERED, CONFORMANCE WITH ALL REQUIREMENTS AS STATED IN THE ARCHAEOLOGICAL MONITORING PLAN SHALL BE THE RESPONSIBILITY OF THE CONTRACTOR. ALL COSTS ASSOCIATED WITH COMPLYING WITH THE ARCHAEOLOGICAL MONITORING PLAN SHALL BE BORNE BY THE CONTRACTOR.

2. PURSUANT TO CHAPTER 6E, HRS, IN THE EVENT ANY ARTIFACTS OR HUMAN REMAINS ARE UNCOVERED DURING CONSTRUCTION OPERATIONS, THE CONTRACTOR SHALL IMMEDIATELY SUSPEND WORK AND NOTIFY THE HONOLULU POLICE DEPARTMENT AND THE STATE DEPARTMENT OF LAND AND NATURAL RESOURCES–HISTORIC PRESERVATION DIVISION (692–8015). IN ADDITION, FOR NON–CITY PROJECTS, THE CONTRACTOR SHALL INFORM THE CIVIL ENGINEERING BRANCH, DEPARTMENT OF PLANNING AND PERMITTING (768–8084); AND FOR CITY PROJECTS, NOTIFY THE RESPONSIBLE CITY AGENCY.

PUBLIC HEALTH SAFETY AND CONVENIENCE NOTES

1. CONTRACTOR SHALL OBSERVE AND COMPLY WITH ALL FEDERAL, STATE, AND LOCAL LAWS REQUIRED FOR THE PROTECTION OF PUBLIC HEALTH, SAFETY AND ENVIRONMENTAL QUALITY.

2. THE CONTRACTOR, AT HIS OWN EXPENSE, SHALL KEEP THE PROJECT AND ITS SURROUNDING AREAS FREE FROM DUST NUISANCE. THE WORK SHALL BE IN CONFORMANCE WITH THE AIR POLLUTION STANDARDS AND REGULATIONS OF THE STATE DEPARTMENT OF HEALTH. THE CITY SHALL REQUIRE SUPPLEMENTARY MEASURES IF REQUIRED.

3. THE CONTRACTOR SHALL PROVIDE, INSTALL AND MAINTAIN ALL NECESSARY SIGNS, LIGHTS, FLARES, BARRICADES, MARKERS, CONES, AND OTHER PROTECTIVE FACILITIES AND SHALL TAKE ALL NECESSARY PRECAUTIONS FOR THE PROTECTION, CONVENIENCE AND SAFETY OF THE PUBLIC.

4. THE CONTRACTOR'S ATTENTION IS DIRECTED TO CHAPTER 46, PUBLIC HEALTH REGULATIONS, DEPARTMENT OF HEALTH, STATE OF HAWAII, "COMMUNITY NOISE CONTROL," IN WHICH MAXIMUM PERMISSIBLE NOISE LEVELS HAVE BEEN SET. IF THE CONSTRUCTION WORK REQUIRES A PERMIT FROM THE DIRECTOR OF HEALTH, THE CONTRACTOR SHALL OBTAIN A COPY OF CHAPTER 46 AND BECOME FAMILIAR WITH THE NOISE LEVEL RESTRICTIONS AND THE PROCEDURES FOR OBTAINING A PERMIT FOR THE CONSTRUCTION ACTIVITIES. APPLICATION AND INFORMATION ON VARIANCES ARE AVAILABLE FROM THE ENVIRONMENTAL HEALTH SERVICES DIVISION, INDOOR AND RADIOLOGICAL HEALTH BRANCH, 99–945 HALAWA VALLEY ST., AIEA, HI 96701 OR BY TELEPHONE (586–4700).

ENVIRONMENTAL NOTES:

1. IN ACCORDANCE WITH CHAPTER 11–60.1, AIR POLLUTION CONTROL, TITLE 11, HAWAI'I ADMINISTRATIVE RULES, THE CONTRACTOR SHALL BE RESPONSIBLE FOR ENSURING THAT EFFECTIVE CONTROL MEASURES ARE PROVIDED TO MINIMIZE OR PREVENT ANY VISIBLE DUST EMISSION CAUSED BY THE CONSTRUCTION WORK FROM IMPACTING THE SURROUNDED AREAS INCLUDING THE OFF–SITE ROADWAYS USED TO ENTER/EXIT THE PROJECT. THESE MEASURES INCLUDE BUT ARE NOT LIMITED TO THE USE OF WATER WAGONS, SPRINKLER SYSTEMS, DUST FENCES, ETC.

2. IN ACCORDANCE WITH CHAPTER 11–55, WATER POLLUTION CONTROL AND CHAPTER 11–54, WATER QUALITY STANDARDS, TITLE 11, STATE ADMINISTRATIVE RULES, THE CONTRACTOR SHALL BE RESPONSIBLE FOR ENSURING THAT THE BEST MANAGEMENT PRACTICE (BMP) TO MINIMIZE OR PREVENT THE DISCHARGE OF SEDIMENTS, DEBRIS AND OTHER WATER POLLUTANT INTO STATE WATERS IS PROVIDED AT ALL TIMES.

3. IN ACCORDANCE WITH CHAPTER 11–58, SOLID WASTE MANAGEMENT CONTROL, TITLE 11, STATE ADMINISTRATIVE RULES, THE CONTRACTOR SHALL BE RESPONSIBLE FOR ENSURING THAT GRUB MATERIAL, DEMOLITION WASTE AND CONSTRUCTION WASTE GENERATED BY THE PROJECT ARE DISPOSED OF IN A MANNER OR AT A SITE APPROVED BY THE STATE DEPARTMENT OF HEALTH. DISPOSAL OF ANY OF THESE WASTES BY BURNING IS PROHIBITED.

4. THE CONTRACTOR SHALL BE RESPONSIBLE FOR OBTAINING AND PAYING FOR ALL APPLICABLE PERMITS FROM THE DEPARTMENT OF HEALTH INCLUDING BUT NOT LIMITED TO NATIONAL DISCHARGE ELIMINATION SYSTEM (NPDES), NOTICE OF INTENT AND GENERAL PERMIT FOR STORM WATER, HYDROSTATIC TEST AND DEWATERING DISCHARGES PRIOR TO COMMENCING CONSTRUCTION.

5. THE CONTRACTOR SHALL HIRE A QUALIFIED BIOLOGIST TO SURVEY THE PROJECT SITE FOR WHITE TERNS IF TREE TRIMMING IS REQUIRED TO COMPLETE THE WORK. IF WHITE TERNS ARE FOUND, DEPARTMENT OF FISH AND WILDLIFE(587–4187) SHOULD BE CONSULTED BEFORE ANY WORK OCCURS.

SPECTRUM GENERAL NOTES:

1. THE LOCATION OF SPECTRUM'S EXISTING FACILITIES ARE APPROXIMATE ONLY. THE CONTRACTOR SHALL EXERCISE EXTREME CAUTION AND SHALL MAINTAIN PROPER CLEARANCES WHENEVER CONSTRUCTION CROSSES OR IS IN CLOSE PROXIMITY OF SPECTRUM FACILITIES. THE CONTRACTOR SHALL VERIFY THEIR LOCATIONS AND ANY DAMAGES SHALL BE REPORTED IMMEDIATELY TO SPECTRUM'S REPAIR SERVICE.

2. FOR UNDERGROUND CABLE LOCATING AND MARKING, FIVE (5) WORKING DAYS ADVANCE NOTICE IS REQUIRED. THREE (3) WORKING DAYS ADVANCE NOTICE IS REQUIRED FOR ANY INSPECTION BY A DESIGNATED REPRESENTATIVE.

3. THE CONTRACTOR SHALL TAKE NECESSARY PRECAUTION NOT TO DAMAGE ANY EXISTING CABLES OR CONDUITS. ANY WORK INVOLVING EXISTING SPECTRUM CABLES OR CONDUITS, SHALL BE DONE IN THE PRESENCE OF AN SPECTRUM INSPECTOR OR DESIGNATED REPRESENTATIVE.

4. THE CONTRACTOR SHALL REQUEST TONING FROM SPECTRUM TWO (2) WEEKS PRIOR TO THE START OF CONSTRUCTION.

5. THE CONTRACTOR SHALL NOTIFY SPECTRUM'S INSPECTOR OR DESIGNATED REPRESENTATIVE A MINIMUM OF 72 HOURS PRIOR TO EXCAVATION, BRACING OR BACKFILLING OF SPECTRUM'S STRUCTURES OR FACILITIES.

6. WHEN EXCAVATION IS ADJACENT TO OR BENEATH SPECTRUM'S EXISTING STRUCTURES OR FACILITIES, THE CONTRACTOR SHALL:

   A. SHEET AND/OR BRACE THE EXCAVATION TO PREVENT SLIDES, CAVE–INS OR SETTLEMENTS TO ENSURE NO MOVEMENT TO SPECTRUM'S STRUCTURES OR FACILITIES.
   B. PROTECT EXISTING STRUCTURES AND/OR FACILITIES WITH BEAMS, STRUTS OR UNDERPINNING WHILE EXCAVATING BENEATH THEM TO ENSURE NO MOVEMENT TO SPECTRUM'S STRUCTURES OR FACILITIES.

HAWAIIAN TELCOM GENERAL NOTES:

1. THE CONTRACTOR SHALL PROCURE AND PAY FOR ALL LICENSES AND PERMITS AND SHALL GIVE ALL NOTICES NECESSARY AND INCIDENT TO THE DUE AND LAWFUL PROSECUTION OF THE WORK.

2. THE CONTRACTOR SHALL OBTAIN AN EXCAVATION PERMIT AND TONING REQUEST FROM HAWAIIAN TELCOM'S EXCAVATION PERMIT SECTION, LOCATED AT 1177 BISHOP STREET, TWO WEEKS PRIOR TO THE START OF CONSTRUCTION. HOURS OF BUSINESS ARE 8:00 A.M. TO 11:00 A.M. AND 12:00 P.M. TO 3:00 P.M. MONDAY THROUGH FRIDAY, EXCEPT HOLIDAYS.

3. PRIOR TO THE EXCAVATION OF THE DUCTLINE, THE CONTRACTOR SHALL REQUEST HAWAIIAN TELCOM TO LOCATE EXISTING DUCTLINE WHEREVER REQUIRED. FOR UNDERGROUND CABLE LOCATING AND MARKING, FIVE (5) WORKING DAYS ADVANCE NOTICE IS REQUIRED. THREE (3) WORKING DAYS ADVANCE NOTICE IS REQUIRED FOR ANY INSPECTION BY A DESIGNATED REPRESENTATIVE.

4. THE LOCATIONS OF EXISTING UTILITIES ARE APPROXIMATE ONLY. THE CONTRACTOR SHALL EXERCISE EXTREME CAUTION AND SHALL MAINTAIN PROPER CLEARANCES WHENEVER CONSTRUCTION CROSSES OR IS IN CLOSE PROXIMITY OF HAWAIIAN TELCOM FACILITIES. THE CONTRACTOR SHALL VERIFY THEIR LOCATIONS AND SHALL BE LIABLE FOR ANY DAMAGES TO HAWAIIAN TELCOM FACILITIES. ANY DAMAGES SHALL BE REPORTED IMMEDIATELY TO HAWAIIAN TELCOM'S REPAIR SECTION AT #611 (24 HOURS) OR TO THE EXCAVATION PERMIT SECTION AT 546–7746 (NORMAL WORKING HOURS, MONDAY THROUGH FRIDAY, EXCEPT HOLIDAYS). AS A RESULT OF THEIR OPERATIONS, ADJUSTMENTS TO THE NEW DUCTLINE ALIGNMENT, IF REQUIRED, SHALL BE MADE TO PROVIDE THE REQUIRED CLEARANCES.

5. THE CONTRACTOR SHALL TAKE NECESSARY PRECAUTION NOT TO DAMAGE EXISTING CABLES OR DUCTS. A HAWAIIAN TELCOM INSPECTOR OR DESIGNATED REPRESENTATIVE IS REQUIRED TO BE AT ANY JOB SITE WHENEVER THERE WILL BE A BREAKAGE INTO OR ENTRY INTO ANY STRUCTURE THAT CONTAIN HAWAIIAN TELCOM FACILITIES. TEMPORARY CABLE AND DUCT SUPPORTS SHALL BE PROVIDED WHEREVER NECESSARY.

6. THE CONTRACTOR SHALL NOTIFY HAWAIIAN TELCOM'S INSPECTOR OR DESIGNATED REPRESENTATIVE A MINIMUM OF 72 HOURS PRIOR TO EXCAVATION, BRACING, OR BACKFILLING OF HAWAIIAN TELCOM'S STRUCTURES OR FACILITIES.

7. ALL APPLICABLE CONSTRUCTION WORK SHALL BE DONE IN ACCORDANCE WITH THE "HAWAIIAN TELCOM STANDARD SPECIFICATIONS FOR PLACING TELEPHONE SYSTEMS" DATED JANUARY 2007, ALL SUBSEQUENT AMENDMENTS AND ADDITIONS, AND ALL OTHER PERTINENT STANDARDS FOR TELEPHONE CONSTRUCTION. CONTRACTOR SHALL FAMILIARIZE THEIR PERSONNEL BY OBTAINING APPLICABLE SPECIFICATIONS.

8. WHEN EXCAVATION IS ADJACENT TO OR BENEATH HAWAIIAN TELCOM'S EXISTING STRUCTURES OR FACILITIES, THE CONTRACTOR SHALL:

   A) SHEET AND/OR BRACE THE EXCAVATION TO PREVENT SLIDES, CAVE–INS, OR SETTLEMENTS TO ENSURE NO MOVEMENT TO HAWAIIAN TELCOM'S STRUCTURES OR FACILITIES.
   B) PROTECT EXISTING STRUCTURES AND/OR FACILITIES WITH BEAMS, STRUTS, OR UNDERPINNING WHILE EXCAVATING BENEATH THEM TO ENSURE NO MOVEMENT TO HAWAIIAN TELCOM'S STRUCTURES OR FACILITIES.

9. THE CONTRACTOR SHALL BRACE ALL POLES OR LIGHT STANDARDS NEAR THE NEW DUCTLINE, MANHOLE, OR HANDHOLE DURING THEIR OPERATIONS.

10. THE CONTRACTOR SHALL COMPLY WITH THE POLICY ADOPTED BY THE DEPARTMENT OF PLANNING AND PERMITTING, CITY AND COUNTY OF HONOLULU, CONCERNING THE REPLACEMENT OF CONCRETE SIDEWALKS AFTER EXCAVATION WORK.

11. THE UNDERGROUND PIPES, CABLES, OR DUCTLINES KNOWN TO EXIST BY THE ENGINEER FROM THEIR SEARCH OF RECORDS ARE INDICATED ON THE PLANS. THE CONTRACTOR SHALL VERIFY THE LOCATIONS AND DEPTHS OF THE FACILITIES AND EXERCISE PROPER CARE IN EXCAVATING IN THE AREA. WHEREVER CONNECTIONS OF NEW UTILITIES TO EXISTING UTILITIES ARE SHOWN ON THE PLANS, THE CONTRACTOR SHALL EXPOSE THE EXISTING LINES AT THE PROPOSED CONNECTIONS TO VERIFY THEIR LOCATIONS AND DEPTHS PRIOR TO EXCAVATION FOR THE NEW LINES.

12. THE CONTRACTOR, AT THEIR OWN EXPENSE, SHALL KEEP THE PROJECT AND SURROUNDING AREA FREE FROM DUST NUISANCE. THE COST FOR SUPPLEMENTARY MEASURES, WHICH WILL BE REQUIRED BY THE CITY AND COUNTY, SHALL BE BORNE BY THE CONTRACTOR.

13. THE CONTRACTOR SHALL NOTIFY HAWAIIAN TELCOM INSPECTOR 24 HOURS PRIOR TO THE POURING OF CONCRETE OR BACKFILLING.

CONSTRUCTION NOTES FOR GAS FACILITIES:

1. HAWAII GAS' PIPELINES IN THE PROJECT AREA ARE PLASTIC COATED AND CATHODICALLY PROTECTED. THE CONTRACTOR SHALL BE EXTREMELY CAREFUL WHEN WORKING NEAR THESE GAS PIPELINES.

2. WRITTEN CLEARANCES MUST BE OBTAINED FROM HAWAII GAS, MAPS AND RECORDS DEPARTMENT, 515 KAMAKEE STREET, AT LEAST FIVE (5) WORKING DAYS PRIOR TO STARTING EXCAVATION NEAR THESE GAS PIPELINES.

3. SINCE GAS LINE LOCATIONS ON FIELD MAPS ARE APPROXIMATE, THE CONTRACTOR, AFTER OBTAINING WRITTEN CLEARANCE, SHALL CALL HAWAII ONE CALL CENTER A MINIMUM OF FIVE (5) WORKING DAYS BEFORE STARTING EXCAVATION TO ARRANGE FOR FIELD LOCATION OF THE EXISTING GAS PIPELINES. THE TELEPHONE NUMBER IS 811 OR 1–866–423–7287.

4. THE CONTRACTOR SHALL EXCAVATE AND BACKFILL AROUND GAS PIPELINES IN THE PRESENCE OF A REPRESENTATIVE OF HAWAII GAS. ALL BACKFILL WITHIN SIX INCHES OF ANY GAS PIPELINE SHALL BE SELECT CUSHION MATERIAL APPROVED BY HAWAII GAS.

5. FOR RELOCATION OF ANY GAS PIPELINE, THE CONTRACTOR SHALL NOTIFY HAWAII GAS FIVE (5) WORKING DAYS BEFORE STARTING WORK. THE TELEPHONE NUMBER IS 594–5574. THE CONTRACTOR SHALL PROVIDE THE NECESSARY EXCAVATION AND BACKFILL, OBTAIN TRAFFIC PERMITS, AND RESTORE PAVEMENT, SIDEWALKS, AND OTHER FACILITIES. ANY RELOCATION OF GAS FACILITIES SHALL BE DONE BY HAWAII GAS AND PAID FOR BY THE CONTRACTOR.

6. THE CONTRACTOR SHALL NOTIFY HAWAII GAS IMMEDIATELY AFTER ANY DAMAGE HAS BEEN CAUSED TO EXISTING GAS PIPELINES, COATINGS, OR ITS CATHODIC PROTECTION DEVICES. THE TELEPHONE NUMBER IS 535–5933, 24 HOURS A DAY. THE CONTRACTOR SHALL BE LIABLE FOR ANY DAMAGE TO HAWAII GAS FACILITIES. REPAIR WORK ON SUCH DAMAGE SHALL BE DONE BY HAWAII GAS, WITH PAYMENT FOR THIS WORK TO BE BORNE BY THE CONTRACTOR.

7. MINIMUM VERTICAL AND HORIZONTAL CLEARANCE BETWEEN THE GAS PIPELINES AND OTHER PIPELINES, CONDUITS, DUCTLINES, OR OTHER FACILITIES SHALL BE 12 INCHES. ADEQUATE SUPPORT AND PROTECTION FOR GAS PIPELINES EXPOSED IN THE TRENCH SHALL BE PROVIDED BY THE CONTRACTOR AND APPROVED BY HAWAII GAS.

8. THE CONTRACTOR SHALL WORK IN AN EXPEDITIOUS MANNER IN ORDER TO KEEP THE UNCOVERED GAS PIPELINES EXPOSED FOR AS SHORT A PERIOD OF TIME AS POSSIBLE.

REVISION NO.	SYM.	DESCRIPTION	SHT.___ OF___	DATE	APPROVED: ADMINISTRATIVE DIRECTOR OF COURTS

JASON H. LAU
LICENSED PROFESSIONAL ENGINEER
NO. 9360–C
HAWAII USA

EXPIRES: 4/30/20

THIS WORK WAS PREPARED BY ME OR UNDER MY SUPERVISION AND CONSTRUCTION OF THIS PROJECT WILL BE UNDER MY OBSERVATION

SIGNATURE

THE JUDICIARY
STATE OF HAWAI'I

KAPUAIWA BUILDING
SEPARATE STORM DRAIN AND BASEMENT
SANITARY SEWER SYSTEMS
HONOLULU, OAHU, HAWAII

NOTES 2

DESIGNED BY: JK/KT	CHECKED BY: JL/JK	JUDICIARY PROJECT NO. 1718–07–014	DRAWING NO. G002
DRAWN BY: HH/SA/KT	APPROVED BY: JL	DATE NOV 2019	SHEET 3 OF 24 SHTS
SCALE: AS SHOWN			

FILE _____ DRAWER _____ FOLDER _____

L:\1. PROJECTS\03 – MISC\1313 – KAPUAIWA DRAINAGE DESIGN\DRAWINGS\NOTES – BUILDING PERMIT.DWG 11/26/2019 6:21 PM

HECO NOTES:

1. THE LOCATION OF HECO'S OVERHEAD AND UNDERGROUND FACILITIES SHOWN ON THE PLANS ARE FROM EXISTING RECORDS WITH VARYING DEGREES OF ACCURACY AND ARE NOT GUARANTEED AS SHOWN. THE CONTRACTOR SHALL VERIFY IN THE FIELD THE LOCATIONS OF THE FACILITIES AND SHALL EXERCISE PROPER CARE IN EXCAVATING AND WORKING IN THE AREA. WHEREVER CONNECTIONS OF NEW UTILITIES TO EXISTING UTILITIES AND UTILITY CROSSINGS ARE SHOWN, THE CONTRACTOR SHALL EXPOSE THE EXISTING LINES AT THE PROPOSED CONNECTIONS AND CROSSINGS TO VERIFY THE DEPTHS PRIOR TO EXCAVATION FOR THE NEW LINES. THE CONTRACTOR SHALL BE RESPONSIBLE FOR ANY DAMAGES TO HECO'S FACILITIES WHETHER SHOWN OR NOT SHOWN ON THE PLANS.

2. THE CONTRACTOR SHALL COMPLY WITH THE STATE OF HAWAII'S OCCUPATIONAL SAFETY AND HEALTH LAWS AND REGULATIONS, INCLUDING WITHOUT LIMITATION, THOSE RELATED TO WORKING ON OR NEAR EXPOSED OR ENERGIZED ELECTRICAL LINES AND EQUIPMENT.

3. THE CONTRACTOR SHALL OBTAIN AN EXCAVATION CLEARANCE FROM HECO'S PLANNING AND DESIGN SECTION OF THE CUSTOMER INSTALLATIONS DEPARTMENT (543-5654) LOCATED AT 820 WARD AVENUE, 4TH FLOOR, A MINIMUM OF TEN (10) WORKING DAYS PRIOR TO STARTING CONSTRUCTION.

4. EXISTING HECO OVERHEAD AND UNDERGROUND LINES ARE ENERGIZED AND WILL REMAIN ENERGIZED DURING CONSTRUCTION UNLESS PRIOR SPECIAL ARRANGEMENTS HAVE BEEN MADE WITH HECO. ONLY HECO PERSONNEL ARE TO HANDLE THESE ENERGIZED LINES AND ERECT TEMPORARY GUARDS TO PROTECT THESE LINES FROM DAMAGE. THE CONTRACTOR SHALL WORK CAUTIOUSLY AT ALL TIMES TO AVOID ACCIDENTS AND DAMAGE TO EXISTING HECO FACILITIES, WHICH CAN RESULT IN ELECTROCUTION.

5. STATE LAW (OSHA 1910.269(k)(2B)) REQUIRES THAT A WORKER AND THE LONGEST OBJECT HE OR SHE MAY CONTACT CANNOT COME CLOSER THAN A SPECIFIED MINIMUM RADIAL CLEARANCE WHEN WORKING CLOSE TO OR UNDER ANY OVERHEAD LINES. IT IS THE CONTRACTOR'S RESPONSIBILITY TO BE INFORMED OF AND COMPLY WITH THE LAW.

   AT ANY TIME SHOULD THE CONTRACTOR ANTICIPATE THAT HIS WORK WILL RESULT IN THE NEED TO ENCROACH WITHIN THE MINIMUM REQUIRED CLEARANCE AS STATED IN THE LAW, THE CONTRACTOR SHALL NOTIFY HECO AT LEAST THREE (3) MONTHS PRIOR TO THE PLANNED ENCROACHMENT SO THAT, IF FEASIBLE, THE NECESSARY PROTECTIONS (E.G. RELOCATE OR DE-ENERGIZE HECO LINES) CAN BE INVESTIGATED. HECO MAY ALSO BE ABLE TO BLANKET ITS DISTRIBUTION (12KV AND BELOW) LINES TO PROVIDE A VISUAL AND IN PREVENTING ACCIDENTAL CONTACT. HECO'S COST OF SAFEGUARDING OR IDENTIFYING ITS LINES WILL BE CHARGED TO THE CONTRACTOR.
   CONTACT HECO'S CUSTOMER INSTALLATIONS DEPARTMENT AT 543-7070 FOR ASSISTANCE IN IDENTIFYING AND SAFEGUARDING OVERHEAD POWER LINES.

6. CONTRACTOR SHALL NOT EXCAVATE WITHIN 10 FEET FROM HECO'S UTILITY POLES OR ANY ANCHOR SYSTEM SUPPORTING THE UTILITY POLE. IF CONTRACTOR MUST EXCAVATE CLOSER THAN 10 FEET FROM A UTILITY POLE OR ITS ANCHOR SYSTEM, CONTRACTOR WILL BE RESPONSIBLE FOR PROTECTING, SUPPORTING, SECURING AND TAKING ALL PRECAUTIONS TO PREVENT DAMAGE TO OR LEANING OF EXISTING POLES. BEFORE COMMENCING SUCH EXCAVATION, CONTRACTOR MUST SUBMIT ITS BRACING CALCULATIONS AND DRAWINGS, PREPARED AND STAMPED BY A LICENSED STRUCTURAL ENGINEER, TO HECO'S CUSTOMER INSTALLATIONS DEPARTMENT (543-7070) FOR REVIEW. HECO REQUIRES A MINIMUM OF TEN (10) WORKING DAYS TO CONDUCT THE REVIEW OF CONTRACTOR'S SUBMITTAL. CONTRACTOR SHALL BE RESPONSIBLE FOR THE DESIGN, INSTALLATION, AND REMOVAL OF THE TEMPORARY POLE BRACING SYSTEM, AS WELL AS ALL COSTS INCURRED BY HECO TO REVIEW CONTRACTOR'S DRAWINGS AND TO REPAIR OR STRAIGHTEN POLES IMPACTED BY CONTRACTOR'S ACTIVITIES, INCLUDING RESPONSE AND RESTORATION COSTS INCURRED BY HECO ARISING OUT OF OR RELATED TO OUTAGES CAUSED BY CONTRACTOR'S FAILURE TO MEET THE FOREGOING REQUIREMENTS. HECO'S REVIEW AND APPROVAL OF ANY CONTRACTOR SUBMITTALS INCLUDING ITS WORK PROCEDURE SHALL NOT RELIEVE CONTRACTOR FROM ANY LIABILITY RESULTING FROM CONTRACTOR'S EXCAVATION NEAR OR AROUND HECO'S UTILITY POLES.

7. THE CONTRACTOR SHALL EXERCISE EXTREME CAUTION WHENEVER CONSTRUCTION CROSSES OR IS IN CLOSE PROXIMITY OF UNDERGROUND LINES. HECO'S EXISTING ELECTRICAL CABLES ARE ENERGIZED AND WILL REMAIN ENERGIZED DURING CONSTRUCTION. ONLY HECO PERSONNEL ARE TO BREAK INTO EXISTING HECO FACILITIES, HANDLE THESE CABLES AND ERECT TEMPORARY GUARDS TO PROTECT THESE CABLES FROM DAMAGE. THE COST OF HECO'S ASSISTANCE IN PROVIDING PROPER SUPPORT AND PROTECTION OF ITS UNDERGROUND LINES WILL BE CHARGED TO THE CONTRACTOR. FOR ASSISTANCE/COORDINATION IN PROVIDING PROPER SUPPORT AND PROTECTION OF THESE LINES, THE CONTRACTOR SHALL CALL HECO'S CUSTOMER INSTALLATIONS DEPARTMENT AT 543-7070 A MINIMUM OF TEN (10) WORKING DAYS IN ADVANCE.

   SPECIAL PRECAUTIONS ARE REQUIRED WHEN EXCAVATING NEAR HECO'S 138KV OR 46KV UNDERGROUND LINES (SEE HECO INSTRUCTIONS TO CONSULTANTS/CONTRACTORS ON "EXCAVATION NEAR HECO'S UNDERGROUND 138KV AND/OR 46KV LINES" FOR DETAILED REQUIREMENTS).

   FOR VERIFICATION OF UNDERGROUND LINES, THE CONTRACTOR SHALL CALL THE HAWAII ONE CALL CENTER AT 866-423-7287 MINIMUM OF FIVE (5) WORKING DAYS IN ADVANCE.

8. THE CONTRACTOR SHALL EXERCISE EXTREME CAUTION WHENEVER CONSTRUCTION CROSSES OR IS IN CLOSE PROXIMITY OF HECO'S UNDERGROUND FUEL OIL PIPELINES. SPECIAL PRECAUTIONS ARE REQUIRED WHEN EXCAVATING NEAR HECO'S UNDERGROUND FUEL OIL PIPELINES (SEE HECO'S SPECIFIC FUEL PIPELINE "GUIDELINES" TO CONSULTANTS/CONTRACTORS ON EXCAVATION NEAR HECO'S UNDERGROUND FUEL PIPELINES FOR DETAILED REQUIREMENTS).

9. WHEN TRENCH EXCAVATION IS ADJACENT TO OR BENEATH HECO'S EXISTING STRUCTURES OR FACILITIES, THE CONTRACTOR IS RESPONSIBLE FOR:

   A. ARRANGING FOR HECO STANDBY PERSONNEL TO OBSERVE WORK AT CONTRACTOR'S COST.
   B. SHEETING, BRACING, OR OTHERWISE SUPPORTING THE EXCAVATION AND STABILIZING THE EXISTING GROUND TO RENDER IT SAFE AND SECURE AND TO PREVENT POSSIBLE SLIDES, CAVE-INS, AND SETTLEMENTS.

HECO NOTES (CONT.):

   C. PROPERLY SUPPORTING EXISTING STRUCTURES OR FACILITIES WITH BEAMS, STRUTS, UNDER-PINNINGS, OR OTHER NECESSARY METHODS TO FULLY PROTECT IT FROM DAMAGE.
   D. BACKFILLING WITH PROPER BACKFILL MATERIAL INCLUDING SPECIAL THERMAL BACKFILL WHERE EXISTING (REFER TO ENGINEERING DEPARTMENT FOR THERMAL BACKFILL SPECIFICATIONS).

10. ANY WORK REQUIRED TO RELOCATE OR MODIFY HECO FACILITIES SHALL BE DONE BY HECO, OR BY THE CONTRACTOR UNDER HECO'S SUPERVISION. THE CONTRACTOR SHALL BE RESPONSIBLE FOR ALL COORDINATION, AND SHALL PROVIDE NECESSARY SUPPORT FOR HECO'S WORK, WHICH MAY INCLUDE, BUT NOT BE LIMITED TO, STAKING OF POLE/ANCHOR LOCATIONS, IDENTIFYING RIGHT OF WAY AND PROPERTY LINES, EXCAVATION AND BACKFILL, PERMITS AND TRAFFIC CONTROL, BARRICADING, AND RESTORATION OF PAVEMENT, SIDEWALKS, AND OTHER FACILITIES.

    ALL COSTS ASSOCIATED WITH ANY RELOCATION OR MODIFICATION (EITHER TEMPORARY OR PERMANENT) FOR THE CONVENIENCE OF THE CONTRACTOR, OR TO ENABLE THE CONTRACTOR TO PERFORM HIS WORK IN A SAFE AND EXPEDITIOUS MANNER IN FULFILLING HIS CONTRACT OBLIGATIONS SHALL BE BORNE BY THE CONTRACTOR.

11. ANY REDESIGN OR RELOCATION OF HECO'S FACILITIES NOT SHOWN ON THE PLANS MAY BE CAUSE FOR LENGTHY DELAYS. THE CONTRACTOR ACKNOWLEDGES THAT HECO IS NOT RESPONSIBLE FOR ANY DELAY OR DAMAGE THAT MAY ARISE AS A RESULT OF ANY CONFLICTS DISCOVERED OR IDENTIFIED WITH RESPECT TO THE LOCATION OR CONSTRUCTION OF HECO'S ELECTRICAL FACILITIES IN THE FIELD, REGARDLESS OF WHETHER THE CONTRACTOR HAS MET THE REQUESTED MINIMUM ADVANCE NOTICES. IN ORDER TO MINIMIZE ANY DELAY OR IMPACT ARISING FROM SUCH CONFLICTS, HECO SHOULD BE NOTIFIED IMMEDIATELY UPON DISCOVERY OR IDENTIFICATION OF SUCH CONFLICT.

12. THE CONTRACTOR SHALL BE RESPONSIBLE FOR THE PROTECTION OF ALL HECO SURFACE AND SUBSURFACE UTILITIES AND SHALL BE RESPONSIBLE FOR ANY DAMAGES TO HECO'S FACILITIES AS A RESULT OF HIS OPERATIONS. THE CONTRACTOR SHALL IMMEDIATELY REPORT SUCH DAMAGES OR ANY HAZARDOUS CONDITIONS RELATED TO HECO'S LINES TO HECO'S TROUBLE DISPATCHER AT 548-7961. REPAIR WORK SHALL BE DONE BY HECO OR BY THE CONTRACTOR UNDER HECO'S SUPERVISION. COSTS FOR DAMAGES TO HECO'S FACILITIES SHALL BE BORNE BY THE CONTRACTOR.

    IN CASE OF DAMAGE OR SUSPECTED DAMAGE TO HECO'S FUEL PIPELINE, THE CONTRACTOR SHALL IMMEDIATELY NOTIFY HECO'S SECURITY COMMAND CENTER AT 543-7685 (A 24-HOUR NUMBER) SO HECO PERSONNEL CAN SECURE THE DAMAGED SECTION AND REPORT ANY OIL SPILLS TO THE PROPER AUTHORITIES. ALL COSTS ASSOCIATED WITH THE DAMAGE, REPAIR, AND OIL SPILL CLEANUP SHALL BE BORNE BY THE CONTRACTOR.

13. THE CONTRACTOR MAY REQUEST HECO TO PROVIDE AN INSPECTOR TO STAND-BY DURING CONSTRUCTION NEAR HECO'S FACILITIES. THE COST OF SUCH INSPECTION WILL BE CHARGED TO THE CONTRACTOR.

    THE CONTRACTOR SHALL CALL THE HECO'S CUSTOMER INSTALLATIONS DEPARTMENT AT 543-7070 A MINIMUM OF TWO (2) MONTHS IN ADVANCE TO ARRANGE FOR HECO STAND-BY PERSONNEL.

14. THE FOLLOWING CLEARANCES SHALL BE MAINTAINED BETWEEN HECO'S DUCTLINE AND ALL ADJACENT STRUCTURES (CHARTED AND UNCHARTED) IN THE TRENCH:

MINIMUM SEPARATION CLEARANCES TO EXISTING UNDERGROUND DUCTLINES HORIZONTAL (PARALLEL)

UTILITY BEING INSTALLED	EXISTING DIRECT BURIED CABLE	EXISTING DIRECT BURIED IN CONDUIT (NO CONCRETE ENCASEMENT)	EXISTING 3" CONCRETE ENCASEMENT	APPLICABLE NOTES:
HECO DB CONDUITS	12"	3"	0"	
HECO 3" ENCASEMENT	0"	0"	0"	
TELEPHONE/CATV DB	12"	12"	6"	
TELEPHONE/CATV DB DUCTS	12"	12"	6"	
TELEPHONE/CATV 3" ENCASEMENT	0"	0"	0"	E
TRAFFIC SIGNAL	12"	12"	12"	
WATER DB	36"	36"	36"	A, D
WATER SERVICE LATERALS	12"	12"	12"	
WATER (CONCRETE JACKETED)	36"	36"	36"	A, D
GAS DB	12"	12"	12"	A
GAS (CONCRETE JACKETED)	12"	12"	12"	A
SEWER DB	36"	36"	36	A, B
SEWER (CONCRETE JACKETED)	36"	36"	36"	A, B
DRAIN	12"	12"	12"	A
FUEL PIPELINES	48"	48"	48"	C

HECO NOTES (CONT.):

   A. WHERE SPACE IS AVAILABLE, PARALLEL CLEARANCE TO OTHER UTILITIES, OR FOREIGN STRUCTURES OTHER THAN COMMUNICATION OR TRAFFIC SIGNAL SHALL BE 36".
   B. IF 36" CLEARANCE CANNOT BE MET:
      -IF CLEARANCE IS LESS THAN 12", JACKET SEWER LINE WITH REINFORCED CONCRETE (PER HECO'S STD. 30-1030) FOR A DISTANCE OF 5' PLUS PIPE DIAMETER.
      -IF CLEARANCE IS BETWEEN 12" AND 36", JACKET SEWER LINE WITH PLAIN CONCRETE.
   C. ALL FUEL PIPELINE CROSSINGS SHALL BE REVIEWED AND APPROVED BY THE COMPANY THAT OWNS AND MAINTAINS IT.
   D. 5 FEET CLEAR TO WATER MAINS 16" AND LARGER.
   E. FOR SITUATIONS WITH 0" MINIMUM SEPARATION, A 6" SEPARATION IS RECOMMENDED.
   F. CLEARANCES MEASURED FROM OUTER EDGES OR DIAMETERS OF UTILITIES. WHENEVER CONCRETE JACKETS ARE INVOLVED, CLEARANCES SHALL BE TOTAL CLEAR DISTANCE BETWEEN THE CONCRETE JACKET AND UTILITY CONCERNED.

GUIDELINES FOR MINIMUM VERTICAL (CROSSING) CLEARANCES BETWEEN HECO AND OTHER UNDERGROUND UTILITIES

UNDERGROUND UTILITY	HECO DIRECT BURIED CABLE	HECO DIRECT BURIED IN CONDUIT (NO CONCRETE ENCASEMENT)	HECO 3" (MINIMUM) CONCRETE ENCASEMENT	APPLICABLE NOTES:
HECO DB CONDUITS	6"	3"	0"	
HECO 3" ENCASEMENT	0"	0"	0"	
TELEPHONE/CATV DB	12"	12"	6"	
TELEPHONE/CATV DB DUCTS	12"	12"	6"	
TELEPHONE/CATV 3" ENCASEMENT	0"	0"	0"	C
TRAFFIC SIGNAL	12"	12"	6"	
WATER DB (BWS OWNED)	12"	12"	12"	E
CUSTOMER OWNED WATER SERVICE LATERALS	6"	6"	6"	
WATER (CONCRETE JACKETED) (BWS OWNED)	12"	12"	12"	E
GAS DB	12"	12"	12"	
GAS (CONCRETE JACKETED)	12"	12"	12"	
SEWER DB	24"	24"	24"	A
SEWER (CONCRETE JACKETED)	24"	24"	24"	A
DRAIN	12"	12"	6"	
FUEL PIPELINES				B

   A. IF CLEARANCE CANNOT BE MET:
      -IF CLEARANCE IS LESS THAN 12", JACKET SEWER LINE WITH REINFORCED CONCRETE (PER HECO'S STD. 30-1030) FOR A DISTANCE OF 5' PLUS PIPE DIAMETER.
      -IF CLEARANCE IS BETWEEN 12" AND 24", JACKET SEWER LINE WITH PLAIN CONCRETE.
   B. ALL FUEL PIPELINE CROSSINGS SHALL BE REVIEWED AND APPROVED BY THE COMPANY THAT OWNS AND MAINTAINS IT.
   C. FOR SITUATIONS WITH 0" MINIMUM SEPARATION, A 6" SEPARATION IS RECOMMENDED.
   D. CLEARANCES MEASURED FROM OUTER EDGES OR DIAMETERS OF UTILITIES. WHENEVER CONCRETE JACKETS ARE INVOLVED, CLEARANCES SHALL BE TOTAL CLEAR DISTANCE BETWEEN THE CONCRETE JACKET AND UTILITY CONCERNED.
   E. 36" CLEARANCE IS REQUIRED FOR TRENCHLESS INSTALLATION WORK.

15. THE CONTRACTOR SHALL NOTIFY THE CONSTRUCTION MANAGER & HECO OF ANY HEAT SOURCES (POWER CABLE DUCT BANK, STREAMLINE, ETC.) ENCOUNTERED THAT ARE NOT PROPERLY IDENTIFIED ON THE DRAWING.

16. THE CONTRACTOR SHALL INDEMNIFY, DEFEND AND HOLD HARMLESS HECO FROM AND AGAINST ALL LOSSES, DAMAGES, CLAIMS, AND ACTIONS, INCLUDING BUT NOT LIMITED TO REASONABLE ATTORNEY'S FEES AND COSTS BASED UPON OR ARISING OUT OF DAMAGE TO PROPERTY OR INJURIES TO PERSONS, OR OTHER TORTIOUS ACTS CAUSED OR CONTRIBUTED TO BY CONTRACTOR OR ANYONE ACTING UNDER ITS DIRECTION OR CONTROL OR ON ITS BEHALF; PROVIDED CONTRACTOR'S INDEMNITY SHALL NOT BE APPLICABLE TO ANY LIABILITY BASED UPON THE SOLE NEGLIGENCE OF HECO.

ABBREVIATIONS

BOT.	BOTTOM
BW	BOTTOM WALL
CB	CATCH BASIN
℄	CENTERLINE
C.L.	CHAIN-LINK
CO	CLEANOUT
COTG	CLEANOUT TO GRADE
CONC.	CONCRETE
DET.	DETAIL
DI	DUCTILE IRON
DWG	DRAWING
E/ELEC.	ELECTRIC
ELEV./EL.	ELEVATION
EXIST.	EXISTING
FM	FORCE MAIN
FT	FEET
FL	FLANGE
GALV.	GALVANIZED
HDPE	HIGH-DENSITY POLYETHYLENE
L	LENGTH
LF	LINEAR FOOT
LP	LIGHT/LAMP POLE
MAX.	MAXIMUM
MECH	MECHANICAL
MIN.	MINIMUM
O.C.A.	ON CENTER
PL	PROPERTY LINE
PVC	POLYVINYL CHLORIDE
RC	REINFORCED CONCRETE
SMH	SEWER MANHOLE
SN	SIGN
STA	STATION
STD.	STANDARD
STRUCT.	STRUCTURAL
TMK	TAX MAP KEY
TOW	TOP OF WALL
TP	TOP PIPE OR TOP PAVEMENT
TYP.	TYPICAL
UP	UTILITY POLE
W	WATER / WIDTH
WWF	WELDED WIRE FABRIC
WL	WATERLINE

REVISION NO.	SYM.	DESCRIPTION	SHT.__ OF__	DATE	APPROVED: ADMINISTRATIVE DIRECTOR OF COURTS

JASON H. LAU
LICENSED PROFESSIONAL ENGINEER
NO. 9360-C
HAWAII USA

EXPIRES: 4/30/20

THIS WORK WAS PREPARED BY ME OR UNDER MY SUPERVISION AND CONSTRUCTION OF THIS PROJECT WILL BE UNDER MY OBSERVATION

SIGNATURE

THE JUDICIARY
STATE OF HAWAI'I

KAPUAIWA BUILDING
SEPARATE STORM DRAIN AND BASEMENT
SANITARY SEWER SYSTEMS
HONOLULU, OAHU, HAWAII

NOTES 3 AND ABBREVIATIONS

DESIGNED BY: JK/KT	CHECKED BY: JL/JK	JUDICIARY PROJECT NO. 1718-07-014	DRAWING NO. G003
DRAWN BY: HH/SA/KT	APPROVED BY: JL	DATE NOV 2019	SHEET 4 OF 24 SHTS
SCALE: AS SHOWN			

FILE ____ DRAWER ____ FOLDER ____

L:\1_PROJECTS\03 - MISC\10313 - KAPUAIWA DRAINAGE DESIGN\DRAWINGS\NOTES - BUILDING PERMIT.DWG 11/26/2019 6:21 PM

EROSION PREVENTION/SEDIMENT CONTROL NOTES

1. THE CONTRACTOR SHALL FOLLOW THE GUIDELINES IN THE CITY AND COUNTY OF HONOLULU'S "RULES RELATING TO WATER QUALITY."

2. MEASURES TO CONTROL EROSION AND OTHER POLLUTANTS SHALL BE IN PLACE BEFORE ANY EARTHWORK IS INITIATED.

3. TEMPORARY STABILIZATION IS REQUIRED ON DISTURBED AREAS WHICH ARE AT FINAL GRADE OR WHEN THE DISTURBED AREA WILL NOT BE WORKED FOR 14 CONSECUTIVE DAYS OR MORE.

4. PERMANENT STABILIZATION. ALL DISTURBED AREAS SHALL BE PERMANENTLY STABILIZED USING VEGETATIVE COVERING, PAVEMENT, OR EQUIVALENT, PRIOR TO REMOVING EROSION AND SEDIMENT MEASURES. TRAPPED SEDIMENT AND AREAS OF DISTURBED SOIL WHICH RESULT FROM THE REMOVAL OF THE TEMPORARY MEASURES SHALL BE IMMEDIATELY AND PERMANENTLY STABILIZED.

5. PRESERVE EXISTING VEGETATION. CLEARLY MARK THE AREAS TO BE AVOIDED WITH FLAGS OR TEMPORARY FENCING. WHERE TEMPORARY FENCING IS USED, FENCING MUST BE ADEQUATELY SUPPORTED BY POSTS AND MAINTAINED IN AN UPRIGHT POSITION.

6. PERIMETER CONTROLS ARE REQUIRED DOWNSLOPE OF ALL DISTURBED AREAS. MAINTAIN DOWNSTREAM VEGETATED BUFFER AREAS.

7. INLET PROTECTION

   A. ALL STORM DRAIN INLETS ONSITE AND THOSE OFFSITE WHICH MAY RECEIVE RUNOFF FROM THE SITE SHALL USE AN INLET PROTECTION DEVICE UNLESS THEY ARE DIRECTED TO A SEDIMENT BASIN.

   B. SEDIMENT LEVELS MAY NOT EXCEED ONE-THIRD OF THE HEIGHT OF A SEDIMENT BARRIER OR INLET PROTECTION DEVICE AT ANY POINT ALONG THE LENGTH OF THE SEDIMENT BARRIER OR THE INLET PROTECTION DEVICE.

   C. SEDIMENT BARRIERS AND INLET PROTECTION DEVICES MUST BE UNCLOGGED AND CLEANED WHEN PERFORMANCE IS COMPROMISED.

   D. TORN, WEATHERED OR SAGGING SEDIMENT BARRIERS OR INLET PROTECTION DEVICES MUST BE REPAIRED OR REPLACED IMMEDIATELY.

8. TRACKING CONTROL

   A. MINIMIZE SEDIMENT TRACK-OUT ONTO OFF-SITE STREETS, OTHER PAVED AREAS, AND SIDEWALKS FROM VEHICLES EXITING THE CONSTRUCTION SITE BY RESTRICTING VEHICLE TRAFFIC TO PROPERLY DESIGNATED AREAS AND USING ADDITIONAL CONTROLS TO REMOVE SEDIMENT FROM VEHICLE TIRES PRIOR TO EXITING THE SITE.

   B. VEHICULAR PARKING AND MOVEMENT ON PROJECT SITES MUST BE CONFINED TO PAVED SURFACES OR PREDEFINED PARKING AREAS AND VEHICLE PATHS, WHICH SHALL BE MARKED WITH FLAGS OR BOUNDARY FENCING.

   C. ALL POLLUTANTS AND MATERIALS THAT ARE DROPPED, WASHED, TRACKED, SPILLED, OR OTHERWISE DISCHARGED FROM A PROJECT SITE TO OFF-SITE STREETS, OTHER PAVED AREAS, SIDEWALKS OR THE MS4 MUST BE CLEANED USING DRY METHODS SUCH AS SWEEPING OR VACUUMING.

   D. WASHING POLLUTANTS AND MATERIALS THAT ARE DISCHARGED FROM THE PROJECT SITE TO THE MS4 INTO DRAIN INLETS OR CATCH BASINS IS PROHIBITED UNLESS THE MATERIAL IS SEDIMENT AND THE INLETS ARE DIRECTED TO A SEDIMENT BASIN OR SEDIMENT TRAP.

9. BEST MANAGEMENT PRACTICES (BMPS) SHALL NOT BE REMOVED UNTIL FINAL STABILIZATION IS COMPLETE FOR THAT PHASE.

10. REFER TO CITY AND COUNTY OF HONOLULU "BEST MANAGEMENT PRACTICES MANUAL - CONSTRUCTION", FOR MORE INFORMATION ON BMPS.

11. A COMPREHENSIVE LIST OF BMPS BASED ON THE DPP "RULES RELATED TO WATER QUALITY" AND CCH "CONSTRUCTION BMP MANUAL" WERE REVIEWED TO COMPLETE THIS ESCP. THE FOLLOWING BMPS WERE DETERMINED TO BE NOT APPLICABLE BECAUSE THEY WOULD NOT EFFECTIVELY MANAGE EROSION PREVENTION AND SEDIMENT CONTROL BASED ON THE SPECIFIC SITE CONDITIONS. AS CONSTRUCTION PROGRESSES, REVISIONS MAY BE NECESSARY AND WILL BE PROVIDED TO DPP INSPECTORS.
   - SLOPE MANAGEMENT AND PROTECTION

12. THIS IS A CATEGORY 1B PROJECT; THEREFORE, AN ESCP COORDINATOR MUST BE DESIGNATED IN WRITING TO THE DPP DIRECTOR AT LEAST TWO WEEKS PRIOR TO COMMENCING ANY WORK. REQUIRED AUTHORIZATION LETTER FORM MAY BE DOWNLOADED AT WWW.HONOLULUDPP.ORG.

13. CONTRACTOR SHALL COMPLY WITH PROJECT SCHEDULING REQUIREMENTS AS DELINEATED IN "RULES RELATING TO WATER QUALITY" §20-3-28 AND SHALL SUBMIT THE SCHEDULED START DATE TO DPP DIRECTOR TWO WEEKS PRIOR TO START OF CONSTRUCTION.

14. COPIES OF THE APPROVED ESCP AND PROJECT SCHEDULE MUST BE KEPT ON THE PROJECT SITE AT ALL TIMES AND IMMEDIATELY MADE AVAILABLE UPON REQUEST.

PROJECT SEQUENCE

1. INSTALL PERIMETER CONTROLS AND INLET PROTECTION FOR PROTECTED AREAS AS NECESSARY FOR THE INSTALLATION OF THESE BMPS.

2. RELOCATE, RECONSTRUCT AND MAINTAIN BMPS AS NEEDED TO KEEP THEM EFFECTIVE AT ALL TIMES. INITIATE TEMPORARY STABILIZATION IMMEDIATELY ONCE CONSTRUCTION HAS BEGUN.

3. PROCEED WITH CONSTRUCTION WITH LEAST POSSIBLE DISTURBANCE OF VEGETATIVE AREAS AND TEMPORARY STRUCTURES.

4. PLANT PERMANENT GROUND COVER ACCORDING TO THE PLANS AND SPECIFICATIONS AS SOON AS POSSIBLE.

5. REMOVE OR DISMANTLE TEMPORARY EROSION CONTROL STRUCTURES AFTER FULL ESTABLISHMENT OF PERMANENT VEGETATIVE COVER.

6. PRACTICE GOOD HOUSEKEEPING MEASURES THROUGHOUT THE DURATION OF CONSTRUCTION.

7. PERFORM INSPECTIONS WEEKLY.

RAIN RESPONSE PLAN

1. THE FOLLOWING WILL BE PERFORMED WHEN HEAVY RAINS, TROPICAL STORM OR HURRICANE IS IMMINENT OR IS FORECASTED IN THE NEXT 48 HOURS:

   A. TEMPORARY SUSPENSION OF ACTIVE GRADING, GRUBBING, AND TRENCHING.

   B. INSPECT ALL PERIMETER CONTROLS, AND INLET PROTECTION DEVICES, AND MAINTAIN AS NEEDED. REINSTALL ANY PERIMETER CONTROLS THAT WERE REMOVED DUE TO ACTIVE WORK IN THE AREA. IF A SEVERE STORM IS EXPECTED, REMOVE INLET PROTECTION DEVICES TO PREVENT FLOODING ON SURROUNDING STREETS.

   C. COVER OR RELOCATE MATERIAL STOCKPILES AND LIQUID MATERIAL CONTAINERS TO AVOID CONTACT WITH RAINWATER.

   D. PLACE SPILL PANS OR OIL-ONLY SPILL PADS UNDER CONSTRUCTION VEHICLES TO PREVENT RUNOFF FROM CONTACTING ANY SPILLED PETROLEUM PRODUCTS. PROPERLY DISPOSE OF ANY ACCUMULATED OILY WATER AFTER THE RAIN EVENT.

2. RE-INSPECT AFTER THE APPROACHING HEAVY RAINS, TROPICAL STORM OR HURRICANE AND REPLACE OR MAINTAIN BMPS AS NEEDED.

GOOD HOUSEKEEPING BMPS

1. STREET SWEEPING AND VACUUMING. ALL POLLUTANTS DISCHARGED FROM CONSTRUCTION SITE TO OFF-SITE AREAS MUST BE SWEPT OR VACUUMED EACH DAY BEFORE LEAVING THE JOB SITE.

2. MATERIALS DELIVERY, STORAGE AND USE MANAGEMENT. PREVENT, REDUCE, OR ELIMINATE THE DISCHARGE OF POLLUTANTS FROM MATERIAL DELIVERY, STORAGE, AND USE TO THE STORM WATER SYSTEM OR WATERCOURSES BY MINIMIZING THE STORAGE OF HAZARDOUS MATERIALS ONSITE, STORING MATERIALS IN A DESIGNATED AREA, INSTALLING SECONDARY CONTAINMENT. CONSTRUCTION MATERIALS, WASTE, TOXIC AND HAZARDOUS SUBSTANCES, STOCKPILES AND OTHER SOURCES OF POLLUTION SHALL NOT BE STORED IN BUFFER AREAS, NEAR AREAS OF CONCENTRATED FLOW, OR AREAS ABUTTING THE MS4, RECEIVING WATERS, OR DRAINAGE IMPROVEMENTS THAT DISCHARGE OFF-SITE. PRIMARY AND SECONDARY CONTAINMENT CONTROLS AND COVERS SHALL BE IMPLEMENTED TO THE MAXIMUM EXTENT POSSIBLE (MEP).

3. SPILL PREVENTION AND CONTROL. CREATE AND IMPLEMENT SPILL PREVENTION AND RESPONSE PLANS TO ELIMINATE AND MINIMIZE THE DISCHARGE OF POLLUTANTS TO THE MS4 AND RECEIVING WATERS FROM LEAKS AND SPILLS BY REDUCING THE CHANCE FOR SPILLS, ABSORBING, CONTAINING, AND CLEANING UP SPILLS AND PROPERLY DISPOSING OF SPILL MATERIALS. AT A MINIMUM, ALL PROJECTS SHALL CLEANUP ALL LEAKS AND SPILLS IMMEDIATELY.

4. HAZARDOUS MATERIALS. PREVENT OR REDUCE THE DISCHARGE OF POLLUTANTS TO STORM WATER FROM HAZARDOUS WASTE THROUGH PROPER MATERIAL USE AND WASTE DISPOSAL. IN THE EVENT THAT HAZARDOUS MATERIALS ARE DISCHARGED TO THE MS4, THE PROPERTY OWNER OR ESCP COORDINATOR SHALL IMMEDIATELY NOTIFY THE CITY DEPARTMENT OF FACILITIES MAINTENANCE, HONOLULU FIRE DEPARTMENT, AND HONOLULU POLICE DEPARTMENT OF THE DISCHARGE BY TELEPHONE. A WRITTEN REPORT DESCRIBING THE POLLUTANTS THAT WERE DISCHARGED, THE REASONS FOR THE DISCHARGE, AND THE MEASURES THAT HAVE BEEN TAKEN OR WILL BE TAKEN TO PREVENT A REOCCURRENCE OF THE DISCHARGE SHALL BE SUBMITTED TO THE DIRECTOR NO LESS THAN 3 DAYS AFTER NOTIFICATION BY PHONE.

5. NONHAZARDOUS MATERIALS. IN THE EVENT THAT NONHAZARDOUS MATERIALS ARE DISCHARGED TO THE MS4, THE PROPERTY OWNER OR ESCP COORDINATOR SHALL NOTIFY THE CITY DEPARTMENT OF FACILITIES MAINTENANCE BY TELEPHONE NO LATER THAN THE NEXT BUSINESS DAY. A WRITTEN REPORT DESCRIBING THE POLLUTANTS THAT WERE DISCHARGED, THE REASONS FOR THE DISCHARGE, AND THE MEASURES THAT HAVE BEEN TAKEN OR WILL BE TAKEN TO PREVENT A REOCCURRENCE OF THE DISCHARGE SHALL BE SUBMITTED TO THE DIRECTOR NO LESS THAN 3 DAYS AFTER NOTIFICATION BY PHONE.

6. VEHICLE AND EQUIPMENT CLEANING. ELIMINATE AND MINIMIZE THE DISCHARGE OF POLLUTANTS TO STORM WATER FROM VEHICLE AND EQUIPMENT CLEANING OPERATIONS BY USING OFF-SITE FACILITIES WHEN FEASIBLE, WASHING IN DESIGNATED, CONTAINED AREAS ONLY, AND ELIMINATING DISCHARGES TO THE STORM DRAIN SYSTEM BY EVAPORATING AND/OR TREATING WASH WATER, AS APPROPRIATE OR INFILTRATING WASH WATER FOR EXTERIOR CLEANING ACTIVITIES THAT USE WATER ONLY.

7. VEHICLE AND EQUIPMENT FUELING. PREVENT FUEL SPILLS AND LEAKS BY USING OFF-SITE FACILITIES, FUELING ONLY IN DESIGNATED AREAS, ENCLOSING OR COVERING STORED FUEL, AND IMPLEMENTING SPILL CONTROLS SUCH AS SECONDARY CONTAINMENT AND ACTIVE MEASURES USING SPILL RESPONSE KITS.

GOOD HOUSEKEEPING BMPS (CONT.)

8. VEHICLE AND EQUIPMENT MAINTENANCE. ELIMINATE AND MINIMIZE THE DISCHARGE OF POLLUTANTS TO STORM WATER FROM VEHICLE AND EQUIPMENT MAINTENANCE OPERATIONS BY USING OFF-SITE FACILITIES WHEN FEASIBLE, PERFORMING WORK IN DESIGNATED AREAS ONLY, USING SPILL PADS UNDER VEHICLES AND EQUIPMENT, CHECKING FOR LEAKS AND SPILLS, AND CONTAINING AND CLEANING UP SPILLS IMMEDIATELY.

9. SOLID WASTE MANAGEMENT. PREVENT OR REDUCE DISCHARGE OF POLLUTANTS TO THE LAND, GROUNDWATER, AND IN STORM WATER FROM SOLID WASTE OR CONSTRUCTION AND DEMOLITION WASTE BY PROVIDING DESIGNATED WASTE COLLECTION AREAS, COLLECT SITE TRASH DAILY, AND ENSURING THAT CONSTRUCTION WASTE IS COLLECTED, REMOVED, AND DISPOSED OF ONLY AT AUTHORIZED DISPOSAL AREAS.

10. SANITARY/SEPTIC WASTE MANAGEMENT. TEMPORARY AND PORTABLE SANITARY AND SEPTIC WASTE SYSTEMS SHALL BE MOUNTED OR STAKED IN, WELL-MAINTAINED AND SCHEDULED FOR REGULAR WASTE DISPOSAL AND SERVICING. SOURCES OF SANITARY AND/OR SEPTIC WASTE SHALL NOT BE SORTED NEAR THE MS4 OR RECEIVING WATERS.

11. STOCKPILE MANAGEMENT. STOCKPILES SHALL NOT BE LOCATED IN DRAINAGE WAYS, WITHIN 50 FEET FROM AREAS OF CONCENTRATED FLOWS, AND ARE NOT ALLOWED IN THE CITY RIGHT-OF-WAY. SEDIMENT BARRIERS OR SILT FENCES SHALL BE USED AROUND THE BASE OF ALL STOCKPILES. STOCKPILES SHALL NOT EXCEED 15 FEET IN HEIGHT. STOCKPILES GREATER THAN 15 FEET IN HEIGHT SHALL REQUIRE 8-FOOT WIDE BENCHING IN ACCORDANCE WITH ROH CHAPTER 14, ARTICLE 15. STOCKPILES MUST BE COVERED WITH PLASTIC SHEETING OR A COMPARABLE MATERIAL IF THEY WILL NOT BE ACTIVELY USED WITHIN 7 DAYS.

12. LIQUID WASTE MANAGEMENT. LIQUID WASTE SHALL BE CONTAINED IN A CONTROLLED AREA SUCH AS A HOLDING PIT, SEDIMENT BASIN, ROLL-OFF BIN, OR PORTABLE TANK OF SUFFICIENT VOLUME AND TO CONTAIN THE LIQUID WASTES GENERATED. CONTAINMENT AREAS OR DEVICES MUST BE IMPERMEABLE AND LEAK FREE AND SHOULD NOT BE LOCATED WHERE ACCIDENTAL RELEASE OF THE CONTAINED LIQUID CAN DISCHARGE TO WATER BODIES, CHANNELS, OR STORM DRAINS.

13. CONCRETE WASTE MANAGEMENT. PREVENT OR REDUCE THE DISCHARGE OF POLLUTANTS TO STORM WATER FROM CONCRETE WASTE BY CONDUCTING WASHOUT OFFSITE OR PERFORMING ONSITE WASHOUT IN A DESIGNATED AREA CONSTRUCTED AND MAINTAINED IN SUFFICIENT QUANTITY AND SIZE TO CONTAIN ALL LIQUID AND CONCRETE WASTE GENERATED BY WASHOUT OPERATIONS. PLASTIC LINING MATERIAL SHOULD BE A MINIMUM OF 10 MILLIMETER POLYETHYLENE SHEETING AND SHOULD BE FREE OF HOLES, TEARS, OR OTHER DEFECTS THAT COMPROMISE THE IMPERMEABILITY OF THE MATERIAL. CONTAINMENT AREAS OR DEVICES SHOULD NOT BE LOCATED WHERE ACCIDENTAL RELEASE OF THE CONTAINED LIQUID CAN DISCHARGE TO WATER BODIES, CHANNELS, OR STORM DRAINS. WASHOUT FACILITIES MUST BE CLEANED, OR NEW FACILITIES MUST BE CONSTRUCTED AND READY FOR USE ONCE THE WASHOUT IS 75 PERCENT FULL. ONCE CONCRETE WASTES ARE WASHED INTO THE DESIGNATED AREA AND ALLOWED TO HARDEN, THE CONCRETE SHOULD BE BROKEN UP, REMOVED, AND DISPOSED OF AS SOLID WASTES.

14. CONTAMINATED SOIL MANAGEMENT. AT MINIMUM CONTAIN CONTAMINATED MATERIAL SOIL BY SURROUNDING WITH IMPERMEABLE LINED BERMS OR COVER EXPOSED CONTAMINATED MATERIAL WITH PLASTIC SHEETING. CONTAMINATED SOIL SHOULD BE DISPOSED OF PROPERLY IN ACCORDANCE WITH ALL APPLICABLE REGULATIONS.

CATEGORY 1B

REVISION NO.	SYM.	DESCRIPTION	SHT.__ OF__	DATE	APPROVED: ADMINISTRATIVE DIRECTOR OF COURTS

JASON H. LAU
LICENSED PROFESSIONAL ENGINEER
NO. 9360-C
HAWAII USA

EXPIRES: 4/30/20

THIS WORK WAS PREPARED BY ME OR UNDER MY SUPERVISION AND CONSTRUCTION OF THIS PROJECT WILL BE UNDER MY OBSERVATION

SIGNATURE

THE JUDICIARY
STATE OF HAWAI'I

KAPUAIWA BUILDING
SEPARATE STORM DRAIN AND BASEMENT
SANITARY SEWER SYSTEMS
HONOLULU, OAHU, HAWAII

EROSION AND SEDIMENT CONTROL NOTES

DESIGNED BY: JK/KT	CHECKED BY: JL/JK	JUDICIARY PROJECT NO. 1718-07-014	DRAWING NO. ESCP1
DRAWN BY: HH/SA/KT	APPROVED BY: JL	DATE NOV 2019	SHEET 5 OF 24 SHTS
SCALE: AS SHOWN			

FILE ____ DRAWER ____ FOLDER ____

L:\: PROJECTS\03 - MISC\10313 - KAPUAIWA DRAINAGE DESIGN\DRAWINGS\ESCP - BUILDING PERMIT.DWG 11/24/2019 7:21 PM

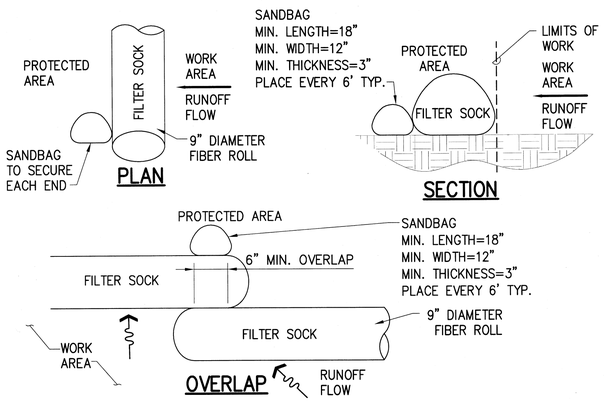

NOTES:
1. REMOVE ACCUMULATED SEDIMENT WHEN DEPTH REACHES 1/3 THE BARRIER HEIGHT.
2. AT COMPLETION OF PROJECT, FILTER SOCKS MATERIAL INCLUDING THE COMPOST SHALL BE REMOVED FROM SITE & DISPOSED OF PROPERLY.
3. FILTER SOCK SHALL MEET THE REQUIREMENTS OF THE CITY CONSTRUCTION BMP FIELD MANUAL FOR FIBER ROLLS.
4. COMPOST SHALL NOT CONTAIN BIOSOLIDS AND SHOULD BE CONSISTENT WITH EPA GUIDELINES.
5. CONTRACTOR IS NOT REQUIRED TO STAKE COMPOST FILTER SOCKS BUT SHALL ENSURE FILTER SOCKS REMAIN IN PLACE TO PROVIDE ADEQUATE PROTECTION.

1 ESCP2 FILTER SOCK
NOT TO SCALE

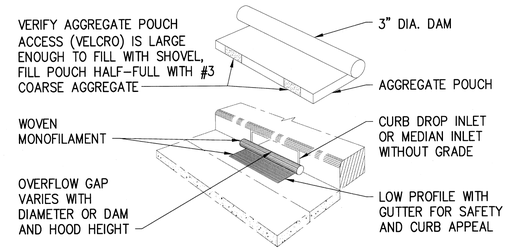

2 ESCP2 SEDIMENT FILTER FOR CATCH BASINS
NOT TO SCALE

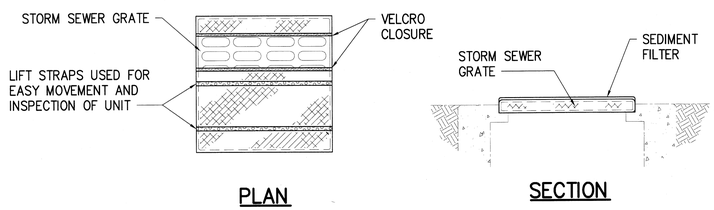

MECHANICAL PROPERTIES	TEST METHOD	UNITS	MARS
GRAB TENSILE STRENGTH	ASTM D 4632	kN (lbs)	1.62 (365) X 0.89 (200)
GRAB TENSILE ELONGATION	ASTM D 4632	%	24 X 10
PUNCTURE STRENGTH	ASTM D 4833	kN (lbs)	0.40 (90)
MULLEN BURST STRENGTH	ASTM D 3786	kPa (psi)	3097 (450)
TRAPEZOID TEAR STRENGTH	ASTM D 4533	kN (lbs)	0.51 (115) X 0.33 (75)
UV RESISTANCE	ASTM D 4355	%	90
APPARENT OPENING SIZE	ASTM D 4751	Mm (US Std Sieve)	0.425 (40)
FLOW RATE	ASTM D 4491	$1/min/m^2$ $(gal/min/ft)^2$	5907 (145)
PERMITTIVITY	ASTM D 4491	Sec^{-1}	2.1

3 ESCP2 DRAIN INLET PROTECTION
NOT TO SCALE

CATEGORY 1B

REVISION NO.	SYM.	DESCRIPTION	SHT.___ OF___	DATE	APPROVED: ADMINISTRATIVE DIRECTOR OF COURTS

JASON H. LAU
LICENSED PROFESSIONAL ENGINEER
NO. 9360-C
HAWAII USA
EXPIRES: 4/30/20
THIS WORK WAS PREPARED BY ME OR UNDER MY SUPERVISION AND CONSTRUCTION OF THIS PROJECT WILL BE UNDER MY OBSERVATION
SIGNATURE

THE JUDICIARY
STATE OF HAWAI'I

KAPUAIWA BUILDING
SEPARATE STORM DRAIN AND BASEMENT SANITARY SEWER SYSTEMS
HONOLULU, OAHU, HAWAII

EROSION AND SEDIMENT CONTROL DETAILS

DESIGNED BY: JK/KT	CHECKED BY: JL/JK	JUDICIARY PROJECT NO. 1718-07-014	DRAWING NO. ESCP2
DRAWN BY: HH/SA/KT	APPROVED BY: JL	DATE NOV 2019	SHEET 6 OF 24 SHTS
SCALE: AS SHOWN			

FILE ____ DRAWER ____ FOLDER ____

L:\1. PROJECTS\03 - MISC\10313 - KAPUAIWA DRAINAGE DESIGN\DRAWINGS\ESCP - BUILDING PERMIT.DWG 11/26/2019 5:03 PM

PRE-CONSTRUCTION BMPS

- ☐ SEDIMENT BARRIERS (FILTER SOCK)
- ☐ INLET PROTECTION FOR EXIST. CATCH BASINS
- ☐ SEDIMENT FILTERS FOR DRAIN INLETS

DURING CONSTRUCTION BMPS

- ☐ BMPS FOR STOCKPILES, STAGING AREA, MATERIAL STORAGE

POST CONSTRUCTION BMPS

- ☐ GRASSING
- ☐ AC PAVEMENT
- ☐ CONCRETE WALKWAYS

GOOD HOUSEKEEPING BMPS

- ☐ SEE NOTES ON DWG. ESCP1

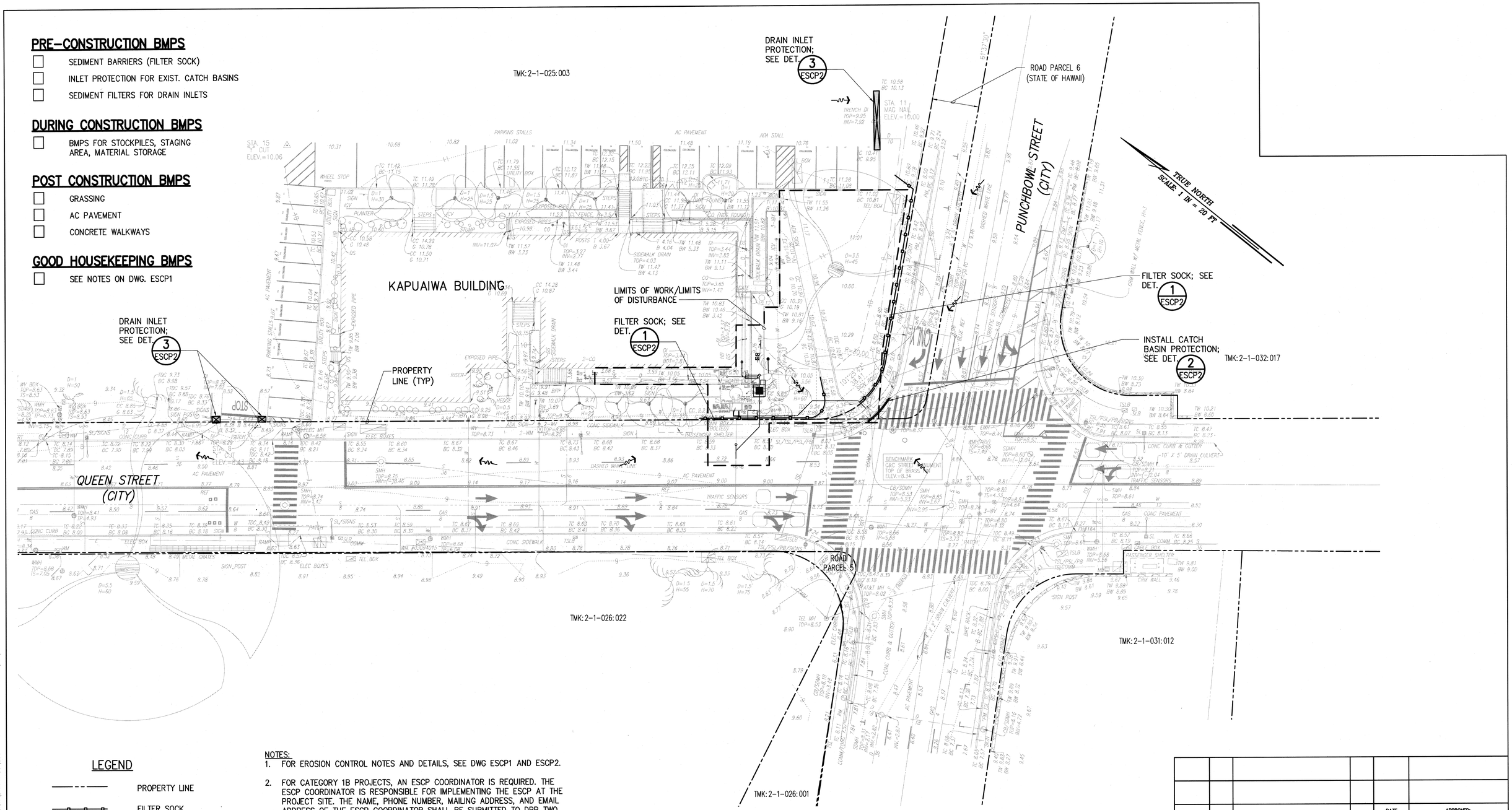

EROSION AND SEDIMENT CONTROL PLAN

SCALE: 1"=20'

LEGEND

- PROPERTY LINE
- FILTER SOCK
- RUNOFF DIRECTION
- LIMITS OF WORK / LIMITS OF DISTURBANCE
- CATCH BASIN PROTECTION
- DRAIN INLET PROTECTION

PROJECT CLASSIFICATION:

DISTURBED AREA = 0.14 ACRES
GRADED AREA = 0 SF
CATEGORY: 1B
PRIORITY: N/A

NOTES:

1. FOR EROSION CONTROL NOTES AND DETAILS, SEE DWG ESCP1 AND ESCP2.
2. FOR CATEGORY 1B PROJECTS, AN ESCP COORDINATOR IS REQUIRED. THE ESCP COORDINATOR IS RESPONSIBLE FOR IMPLEMENTING THE ESCP AT THE PROJECT SITE. THE NAME, PHONE NUMBER, MAILING ADDRESS, AND EMAIL ADDRESS OF THE ESCP COORDINATOR SHALL BE SUBMITTED TO DPP TWO (2) WEEKS PRIOR TO COMMENCEMENT OF WORK.
3. THE CONTRACTOR SHALL SUBMIT A WRITTEN PROJECT SCHEDULE AS REQUIRED BY CITY AND COUNTY OF HONOLULU'S RULES RELATING TO WATER QUALITY SECTION 20-3-28 TO DPP FOR APPROVAL.
4. THE CONTRACTOR SHALL OBTAIN WRITTEN APPROVAL FROM THE DIRECTOR AT EACH STAGE OF DEVELOPMENT BEFORE PROCEEDING TO THE NEXT STAGE IN DEVELOPMENT.
5. CONTRACTOR SHALL RESTORE ALL EXISTING LANDSCAPE AREAS DISTURBED DURING CONSTRUCTION. NECESSARY TEMPORARY FILTER SOCKS AND CATCH BASIN PROTECTION SHALL REMAIN IN PLACE UNTIL RESTORATION IS COMPLETE.

CATEGORY 1B

REVISION NO.	SYM.	DESCRIPTION	SHT. OF	DATE	APPROVED: ADMINISTRATIVE DIRECTOR OF COURTS

JASON H. LAU
LICENSED PROFESSIONAL ENGINEER
NO. 9360-C
HAWAII USA

EXPIRES: 4/30/20

THIS WORK WAS PREPARED BY ME OR UNDER MY SUPERVISION AND CONSTRUCTION OF THIS PROJECT WILL BE UNDER MY OBSERVATION

SIGNATURE

THE JUDICIARY
STATE OF HAWAI'I

KAPUAIWA BUILDING
SEPARATE STORM DRAIN AND BASEMENT
SANITARY SEWER SYSTEMS
HONOLULU, OAHU, HAWAII

EROSION AND SEDIMENT CONTROL PLAN

DESIGNED BY: JK/KT	CHECKED BY: JL/JK	JUDICIARY PROJECT NO. 1718-07-014	DRAWING NO. ESCP3
DRAWN BY: HH/SA/KT	APPROVED BY: JL	DATE NOV 2019	SHEET 7 OF 24 SHTS
SCALE: AS SHOWN			

FILE ____ DRAWER ____ FOLDER ____

L:\1. PROJECTS\03 - MISC\10313 - KAPUAIWA DRAINAGE DESIGN\DRAWINGS\ESCP - BUILDING PERMIT.DWG 11/24/2019 7:21 PM

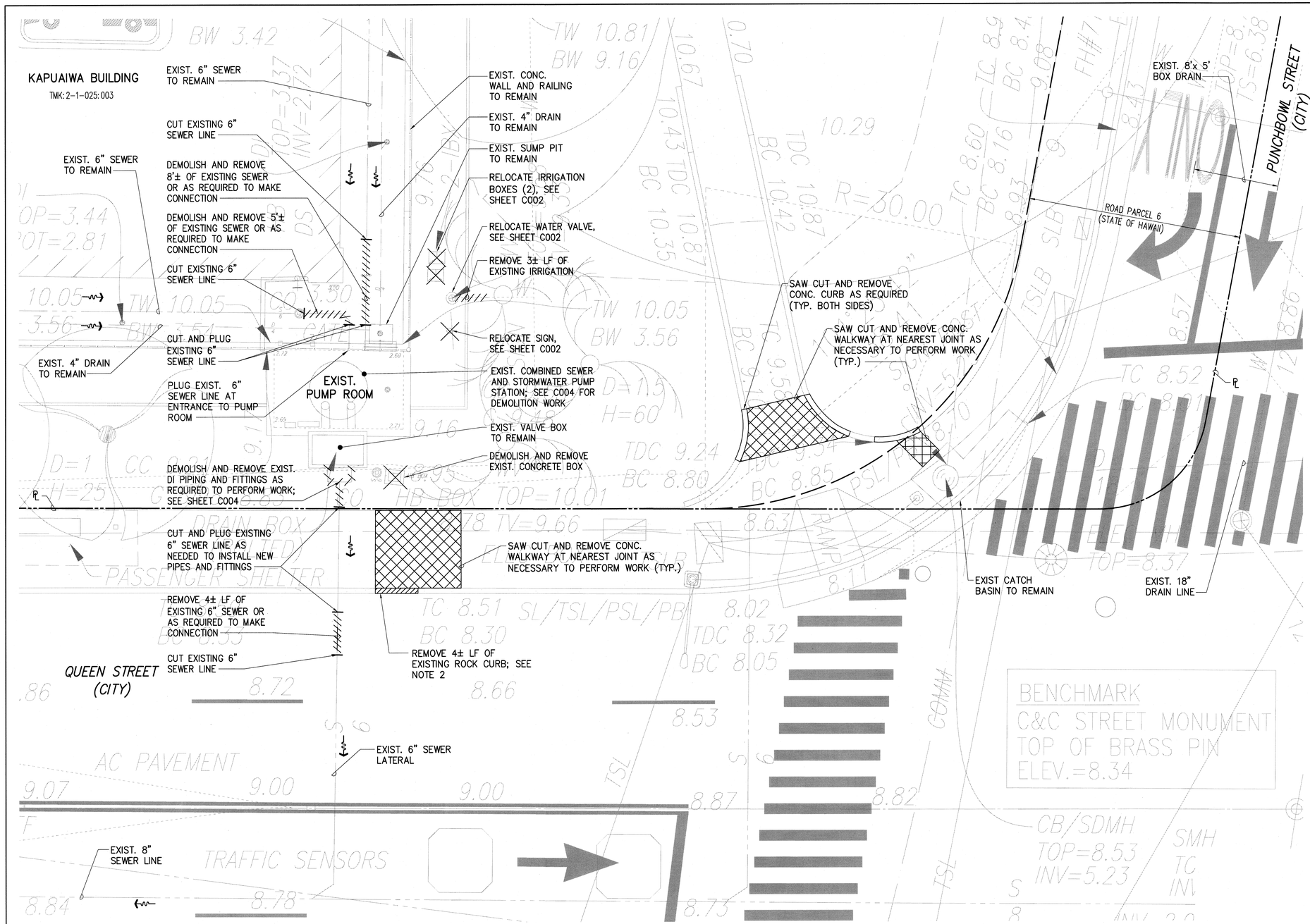

DEMOLITION PLAN

SCALE: 1"=5'

NOTES:

1. FOR DEMOLITION OF PUMP STATION, SEE SHEET C004.
2. BASALTIC LAVA ROCK CURBS SHALL BE SALVAGED AND STORED AT THE CITY'S HALAWA CORPORATION YARD AT 99-1077 IWAENA STREET (TELEPHONE: 768-3630) FOR FUTURE USE.

GRAPHIC SCALE

5 0 5 10

(IN FEET)
1 inch = 000 ft.

LEGEND:

- DEMOLISH & REMOVE PIPING
- DEMOLISH & REMOVE
- PROPERTY LINE
- FLOW DIRECTION
- REMOVE AND SALVAGE ROCK CURB
- DEMOLISH & REMOVE CONCRETE WALKWAY

REVISION NO.	SYM.	DESCRIPTION	SHT.__ OF__	DATE	APPROVED: ADMINISTRATIVE DIRECTOR OF COURTS

JASON H. LAU
LICENSED PROFESSIONAL ENGINEER
NO. 9360-C
HAWAII USA

EXPIRES: 4/30/20

THIS WORK WAS PREPARED BY ME OR UNDER MY SUPERVISION AND CONSTRUCTION OF THIS PROJECT WILL BE UNDER MY OBSERVATION

SIGNATURE

THE JUDICIARY
STATE OF HAWAI'I

KAPUAIWA BUILDING
SEPARATE STORM DRAIN AND BASEMENT SANITARY SEWER SYSTEMS
HONOLULU, OAHU, HAWAII

DEMOLITION PLAN

DESIGNED BY: JK/KT	CHECKED BY: JL/JK	JUDICIARY PROJECT NO. 1718-07-014	DRAWING NO. C001
DRAWN BY: HH/SA/KT	APPROVED BY: JL	DATE NOV 2019	SHEET 8 OF 24 SHTS
SCALE: AS SHOWN			

FILE ____ DRAWER ____ FOLDER ____

L:\1 PROJECTS\03 - MISC\10313 - KAPUAIWA DRAINAGE DESIGN\DRAWINGS\DEMO PLAN - BUILDING PERMIT.DWG 11/26/2019 5:05 PM

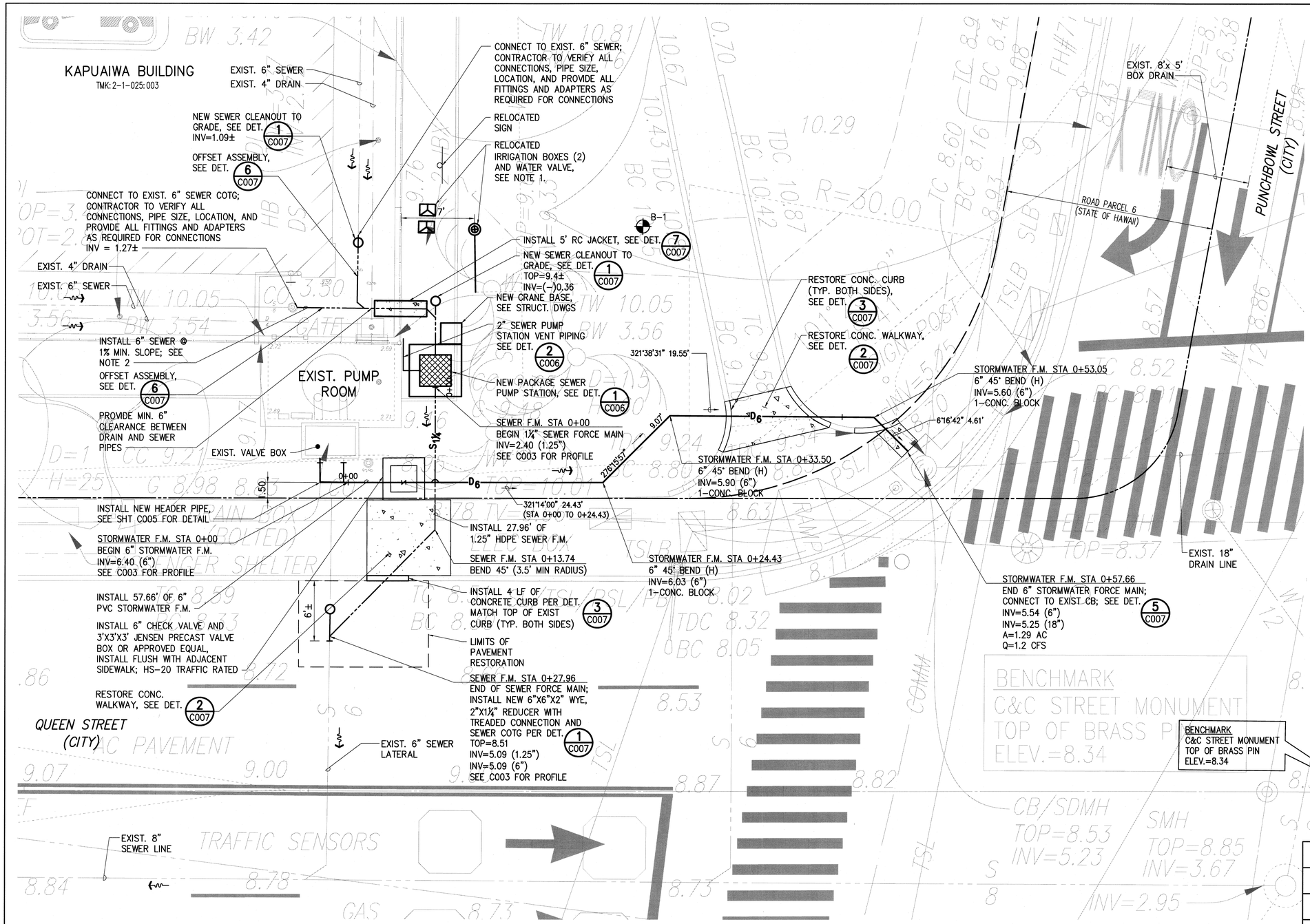

SITE PLAN

SCALE: 1"=5'

NOTES:

1. CONTRACTOR TO VERIFY IRRIGATION LINE LOCATION AND RELOCATE VALVE AND IRRIGATION BOXES AS NECESSARY TO PERFORM WORK AND ENSURE IRRIGATION SYSTEM IS RESTORED TO WORKING CONDITION.
2. CONTRACTOR TO VERIFY DEPTH & LOCATION OF EXIST. 4" DRAIN LINE AND NOTIFY OFFICER-IN-CHARGE OF ANY CONFLICT WITH PROPOSED 6" SEWER LINE.
3. CONTRACTOR SHALL RESTORE ALL PAVEMENT, PAVEMENT MARKINGS, CURBS, WALKWAYS, AND GRASSED AREAS DAMAGED DURING CONSTRUCTION. RESTORATION SHALL BE DONE TO MATCH THE EXISTING CONDITIONS OR BETTER AND SHALL BE CONSIDERED INCIDENTAL TO CONSTRUCTION.
4. SEWER FORCE MAIN SHOWN INDICATES THE POINT OF INTERSECTION OF PIPE, ACTUAL PIPE SHALL BE INSTALLED USING A MIN. BEND RADIUS OF 3.5 FEET.
5. INSTALL CONCRETE BLOCKS IN ACCORDANCE WITH BWS STANDARD DETAIL B2 AND B3 FOR TYPE "D" SOIL CONDITIONS FOR STORMWATER FORCE MAIN.

GRAPHIC SCALE

5 0 5 10

(IN FEET)
1 inch = 5 ft.

LEGEND:

- PROPERTY LINE
- CONCRETE WALKWAY
- $S_{1\frac{1}{4}}$ SEWER FORCE MAIN
- D_6 STORMWATER FORCE MAIN
- FLOW DIRECTION
- B-1 BORING LOG LOCATION

REVISION NO.	SYM.	DESCRIPTION	SHT.___ OF___	DATE	APPROVED: ADMINISTRATIVE DIRECTOR OF COURTS

JASON H. LAU
LICENSED PROFESSIONAL ENGINEER
NO. 9360-C
HAWAII USA

EXPIRES: 4/30/20

THIS WORK WAS PREPARED BY ME OR UNDER MY SUPERVISION AND CONSTRUCTION OF THIS PROJECT WILL BE UNDER MY OBSERVATION

SIGNATURE

THE JUDICIARY
STATE OF HAWAI'I

KAPUAIWA BUILDING
SEPARATE STORM DRAIN AND BASEMENT SANITARY SEWER SYSTEMS
HONOLULU, OAHU, HAWAII

SITE PLAN

DESIGNED BY: JK/KT	CHECKED BY: JL/JK	JUDICIARY PROJECT NO. 1718-07-014	DRAWING NO. C002
DRAWN BY: HH/SA/KT	APPROVED BY: JL	DATE NOV 2019	SHEET 9 OF 24 SHTS
SCALE: AS SHOWN			

FILE ____ DRAWER ____ FOLDER ____

L:\1_PROJECTS\03 - MISC\10313 - KAPUAIWA DRAINAGE DESIGN\DRAWINGS\SITE PLAN - BUILDING PERMIT.DWG 11/25/2019 6:37 PM

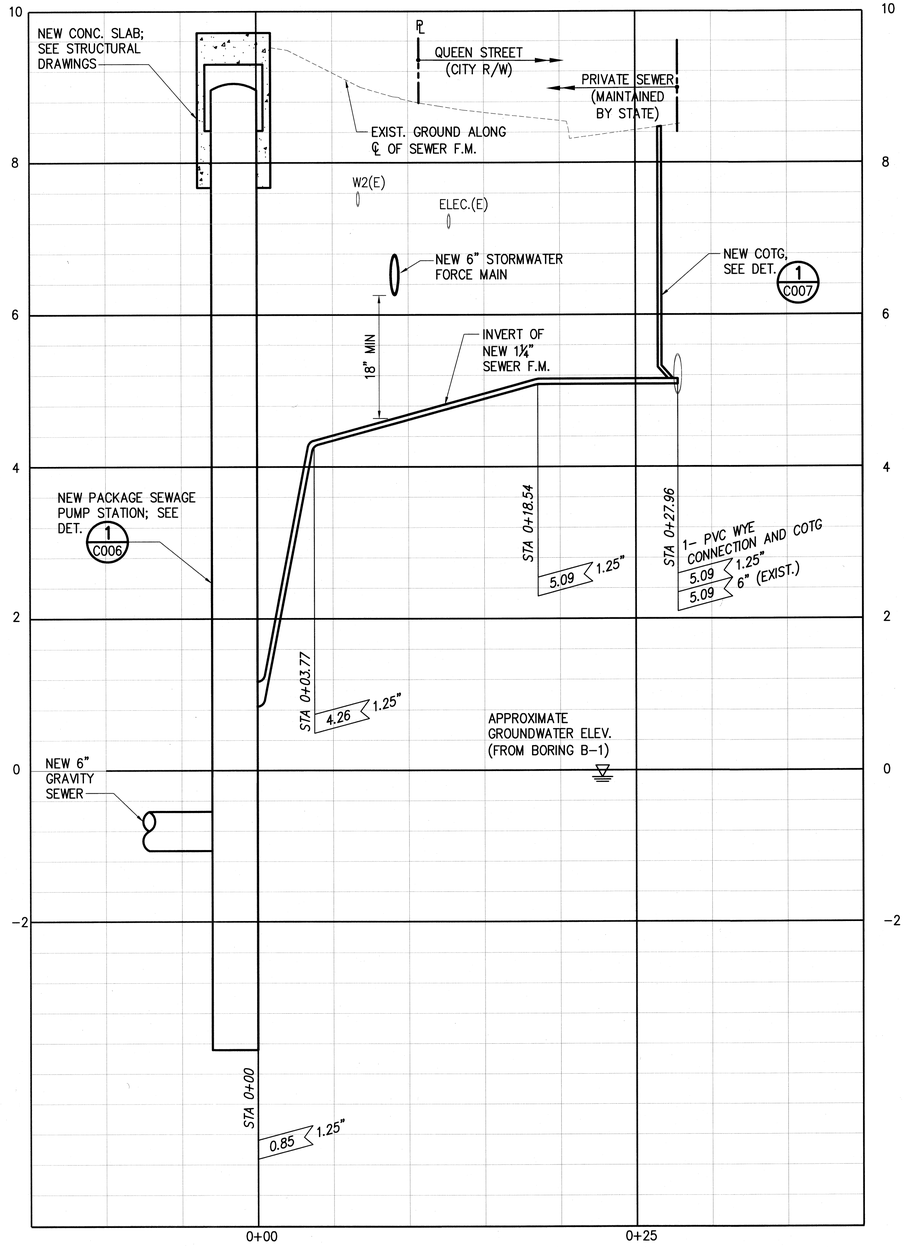

SEWER FORCE MAIN NOTES:

1. THE MIN. BEND RADIUS OF THE 1¼" SEWER FORCE MAIN SHALL BE 3.5 FEET.
2. PIPE ELEVATIONS SHOWN INDICATE THE POINT OF INTERSECTION OF PIPE, ACTUAL ELEVATIONS OF PIPE WILL VARY BASED ON BEND RADIUS.

SEWER FORCE MAIN PROFILE

SCALE: HORIZ. 1" = 5'
VERT. 1" = 1'

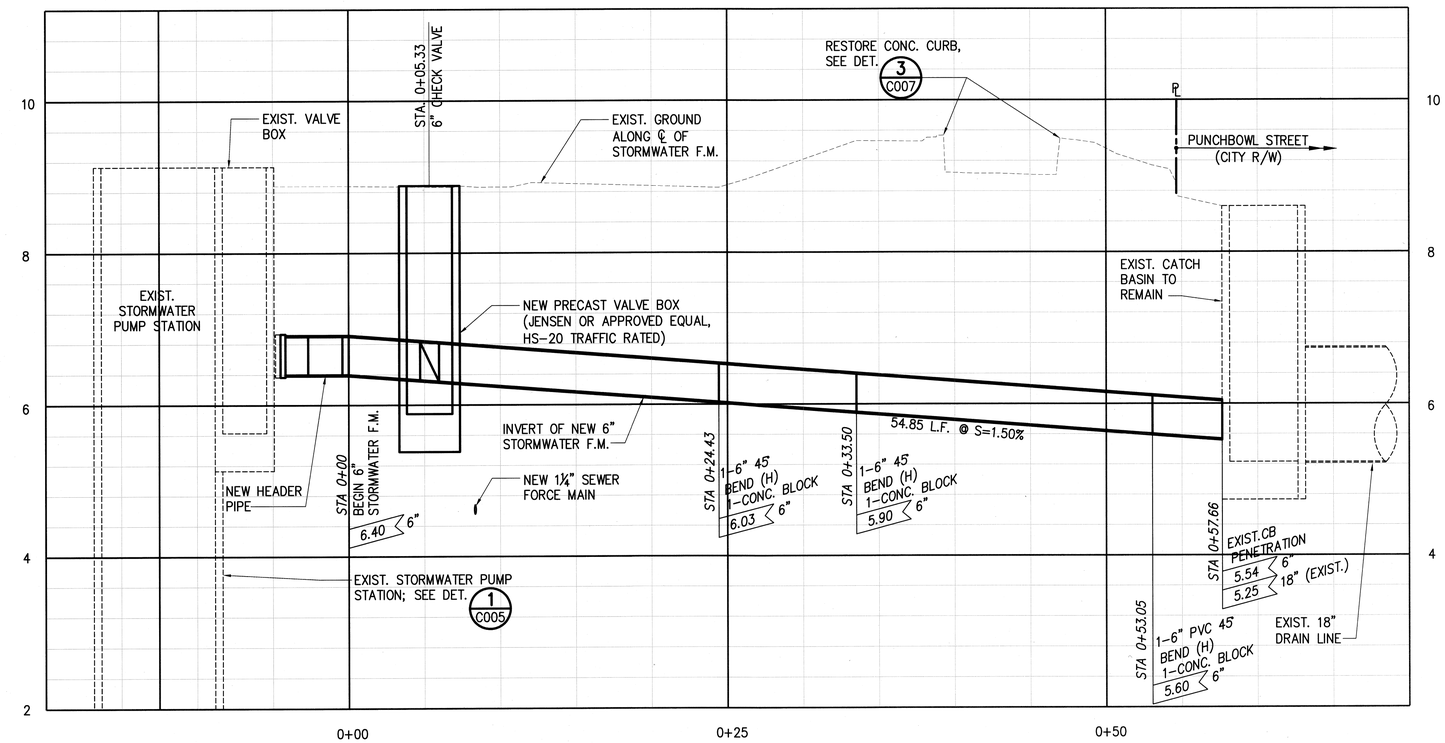

STORMWATER FORCE MAIN PROFILE

SCALE: HORIZ. 1" = 5'
VERT. 1" = 1'

REVISION NO.	SYM.	DESCRIPTION	SHT.__ OF__	DATE	APPROVED: ADMINISTRATIVE DIRECTOR OF COURTS

JASON H. LAU
LICENSED PROFESSIONAL ENGINEER
NO. 9360-C
HAWAII USA

EXPIRES: 4/30/20

THIS WORK WAS PREPARED BY ME OR UNDER MY SUPERVISION AND CONSTRUCTION OF THIS PROJECT WILL BE UNDER MY OBSERVATION

SIGNATURE

THE JUDICIARY
STATE OF HAWAI'I

KAPUAIWA BUILDING
SEPARATE STORM DRAIN AND BASEMENT SANITARY SEWER SYSTEMS
HONOLULU, OAHU, HAWAII

UTILITY PROFILES

DESIGNED BY: JK/KT	CHECKED BY: JL/JK	JUDICIARY PROJECT NO. 1718-07-014	DRAWING NO. C003
DRAWN BY: HH/SA/KT	APPROVED BY: JL	DATE NOV 2019	SHEET 10 OF 24 SHTS
SCALE: AS SHOWN			

FILE ____ DRAWER ____ FOLDER ____

L:\1. PROJECTS\03 - MISC\10313 - KAPUAIWA DRAINAGE DESIGN\DRAWINGS\PROFILE - BUILDING PERMIT.DWG 11/25/2019 6:58 PM

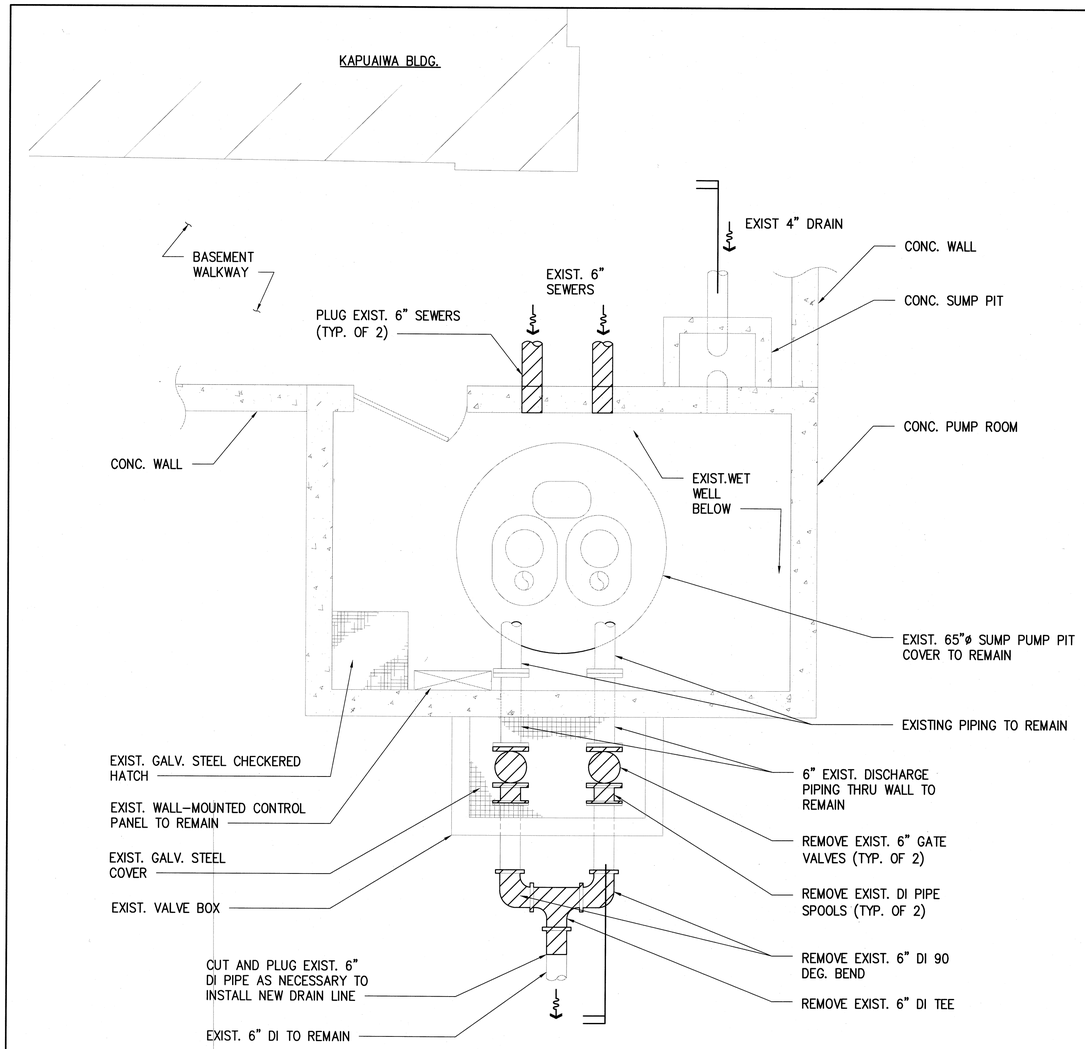

PLAN

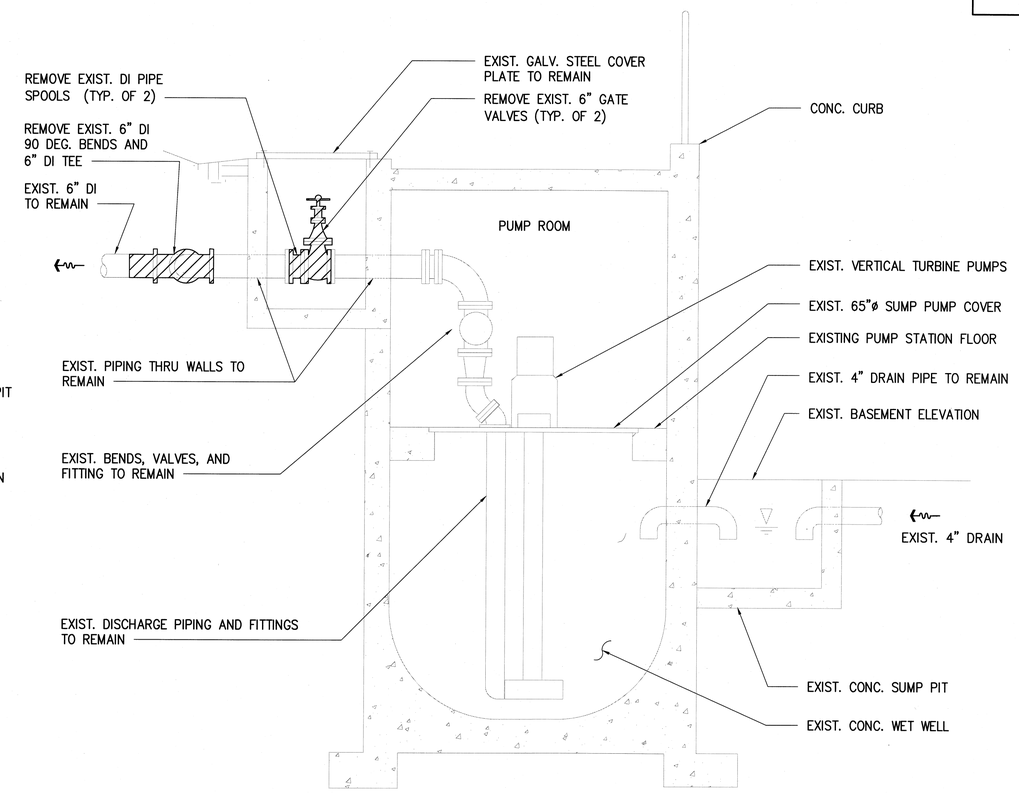

SECTION

1 / C004 EXISTING STORMWATER PUMP STATION DEMOLITION PLAN & SECTION

SCALE : 1/2" = 1'-0"

REVISION NO.	SYM.	DESCRIPTION	SHT.___ OF___	DATE	APPROVED: ADMINISTRATIVE DIRECTOR OF COURTS

JASON H. LAU
LICENSED PROFESSIONAL ENGINEER
NO. 9360-C
HAWAII USA

EXPIRES: 4/30/20

THIS WORK WAS PREPARED BY ME OR UNDER MY SUPERVISION AND CONSTRUCTION OF THIS PROJECT WILL BE UNDER MY OBSERVATION

SIGNATURE

THE JUDICIARY
STATE OF HAWAI'I

KAPUAIWA BUILDING
SEPARATE STORM DRAIN AND BASEMENT SANITARY SEWER SYSTEMS
HONOLULU, OAHU, HAWAII

STORMWATER PUMP STATION DEMOLITION PLAN & SECTION

DESIGNED BY: JK/KT	CHECKED BY: JL/JK	JUDICIARY PROJECT NO. 1718-07-014	DRAWING NO. C004
DRAWN BY: HH/SA/KT	APPROVED BY: JL	DATE NOV 2019	SHEET 11 OF 24 SHTS
SCALE: AS SHOWN			

FILE ____ DRAWER ____ FOLDER ____

L:\1. PROJECTS\03 - MISC\10313 - KAPUAIWA DRAINAGE DESIGN\DRAWINGS\STORMWATER PS DEMO - BUILDIGN PERMIT.DWG 11/25/2019 5:52 PM

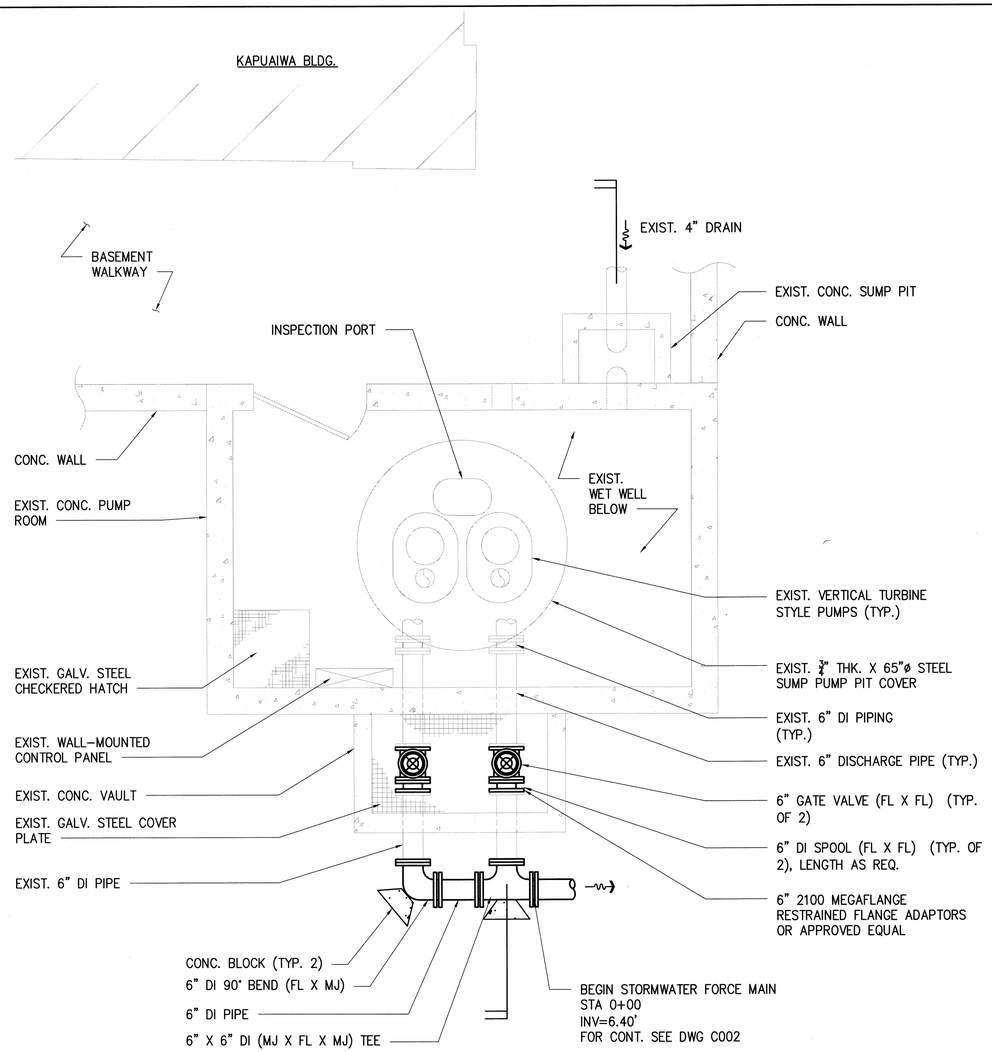

PLAN

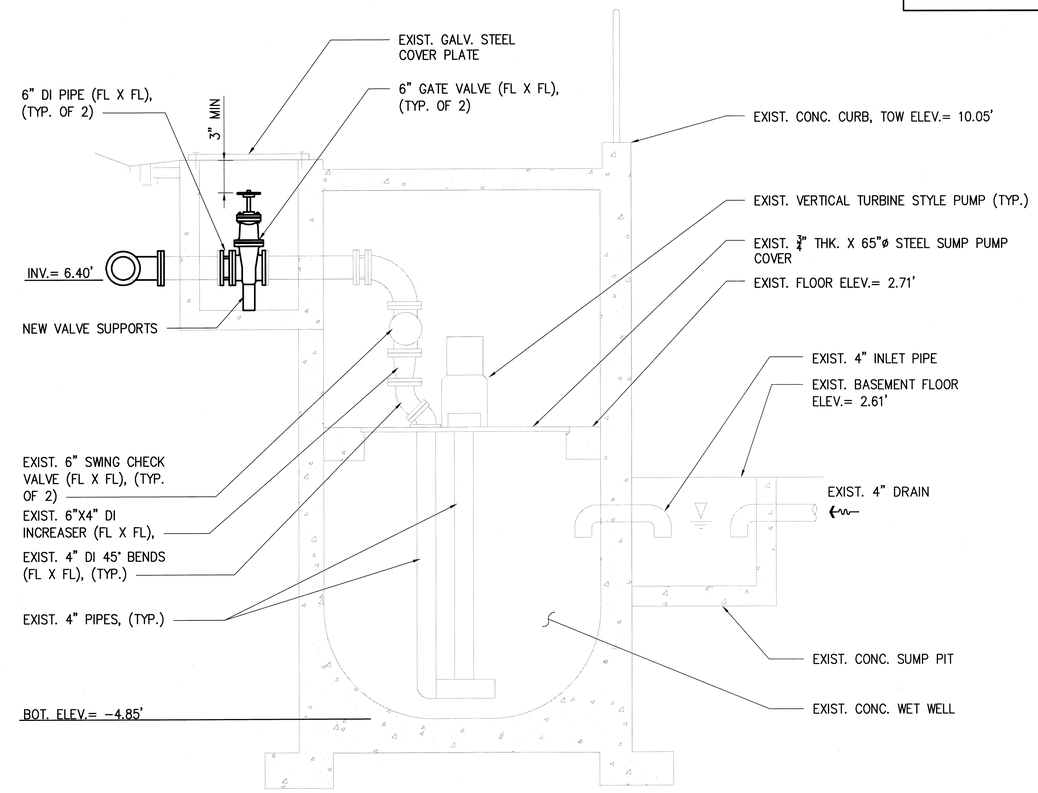

SECTION

NOTE:
1. INSTALL CONCRETE BLOCKS IN ACCORDANCE WITH BWS STANDARD DETAIL B2 AND B3 FOR TYPE "D" SOIL CONDITIONS.

1 / C005 STORMWATER PUMP STATION DETAIL

SCALE : 1/2" = 1'-0"

REVISION NO.	SYM.	DESCRIPTION	SHT.___ OF___	DATE	APPROVED: ADMINISTRATIVE DIRECTOR OF COURTS

JASON H. LAU
LICENSED PROFESSIONAL ENGINEER
NO. 9360-C
HAWAII USA

EXPIRES: 4/30/20

THIS WORK WAS PREPARED BY ME OR UNDER MY SUPERVISION AND CONSTRUCTION OF THIS PROJECT WILL BE UNDER MY OBSERVATION

SIGNATURE

THE JUDICIARY
STATE OF HAWAI'I

KAPUAIWA BUILDING
SEPARATE STORM DRAIN AND BASEMENT SANITARY SEWER SYSTEMS
HONOLULU, OAHU, HAWAII

STORMWATER PUMP STATION DETAIL

DESIGNED BY: JK/KT	CHECKED BY: JL/JK	JUDICIARY PROJECT NO. 1718-07-014	DRAWING NO. C005
DRAWN BY: HH/SA/KT	APPROVED BY: JL	DATE NOV 2019	SHEET 12 OF 24 SHTS
SCALE: AS SHOWN			

FILE ____ DRAWER ____ FOLDER ____

L:\1. PROJECTS\03 - MISC\10313 - KAPUAIWA DRAINAGE DESIGN\DRAWINGS\STORMWATER PS DETAILS - BUILDING PERMIT.DWG 11/25/2019 5:52 PM

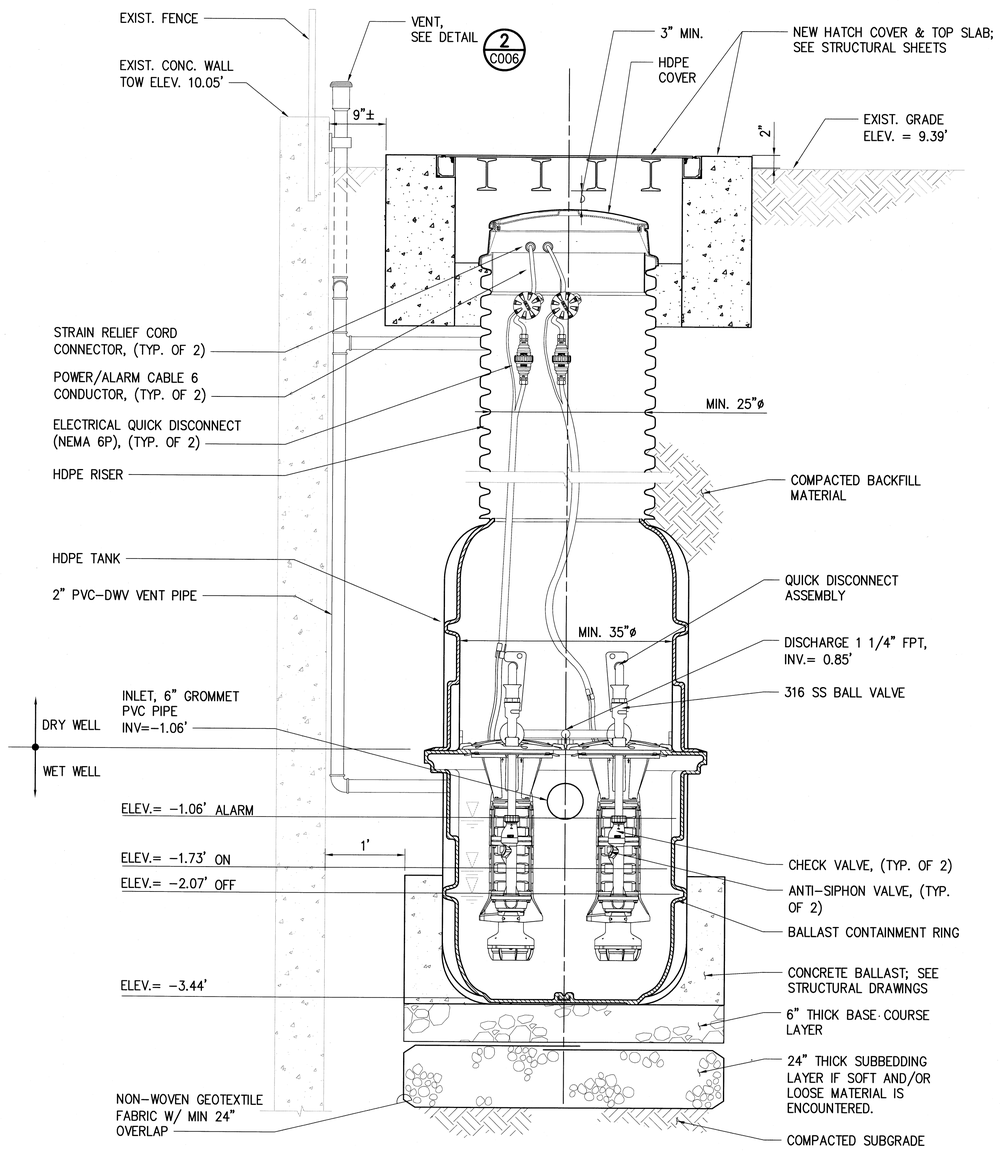

1 C006 PACKAGE SEWER PUMP STATION DETAIL

SCALE : 1" = 1'-0"

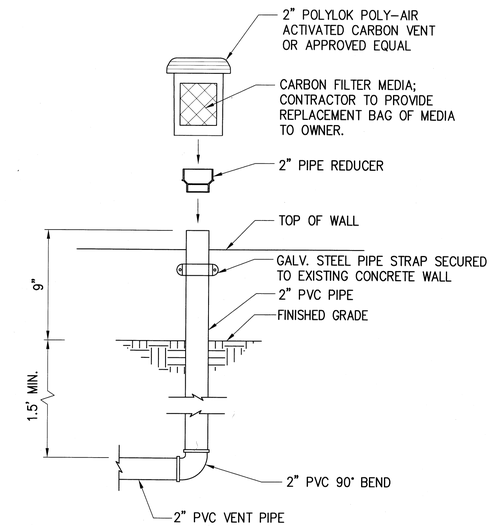

2 C006 PACKAGE SEWER PUMP STATION VENT

NOT TO SCALE

PUMP SCHEDULE:

UNIT	TYPE	GPM	TOTAL DYNAMIC HEAD (FT)	MAX RPM	ELECTRICAL				FLUID	MAKE & MODEL
					HP	V	PH	HZ		
SEWER PUMP	GRINDER PUMP	14	11	1725	1	240	1	60	WASTEWATER	E/ONE GRINDER PUMP OR APPROVED EQUAL

*SEE SPECS FOR ADDITIONAL PERFORMANCE REQUIREMENTS

REVISION NO.	SYM.	DESCRIPTION	SHT.___ OF___	DATE	APPROVED: ADMINISTRATIVE DIRECTOR OF COURTS

JASON H. LAU LICENSED PROFESSIONAL ENGINEER NO. 9360-C HAWAII USA

EXPIRES: 4/30/20

THIS WORK WAS PREPARED BY ME OR UNDER MY SUPERVISION AND CONSTRUCTION OF THIS PROJECT WILL BE UNDER MY OBSERVATION

SIGNATURE

THE JUDICIARY
STATE OF HAWAI'I

KAPUAIWA BUILDING
SEPARATE STORM DRAIN AND BASEMENT SANITARY SEWER SYSTEMS
HONOLULU, OAHU, HAWAII

PACKAGE SEWER PUMP STATION DETAIL

DESIGNED BY: JK/KT	CHECKED BY: JL/JK	JUDICIARY PROJECT NO. 1718-07-014	DRAWING NO. C006
DRAWN BY: HH/SA/KT	APPROVED BY: JL	DATE NOV 2019	SHEET 13 OF 24 SHTS
SCALE: AS SHOWN			

FILE ____ DRAWER ____ FOLDER ____

L:\1. PROJECTS\03 - MISC\10313 - KAPUAIWA DRAINAGE DESIGN\DRAWINGS\SEWER PS DETAILS - BUILDING PERMIT.DWG 11/25/2019 4:03 PM

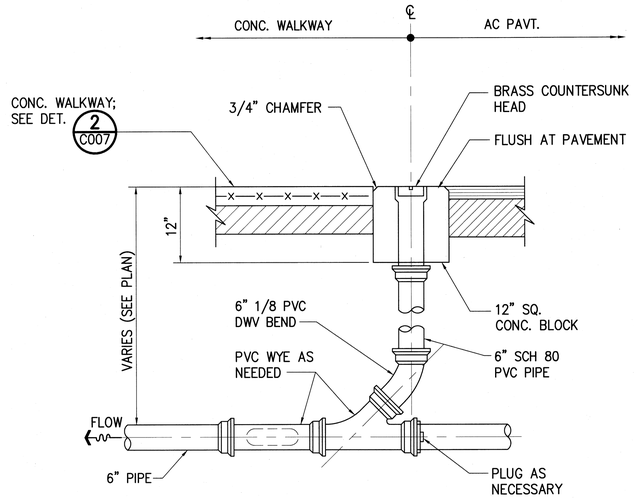

1 CLEANOUT TO GRADE DETAIL
C007 NOT TO SCALE

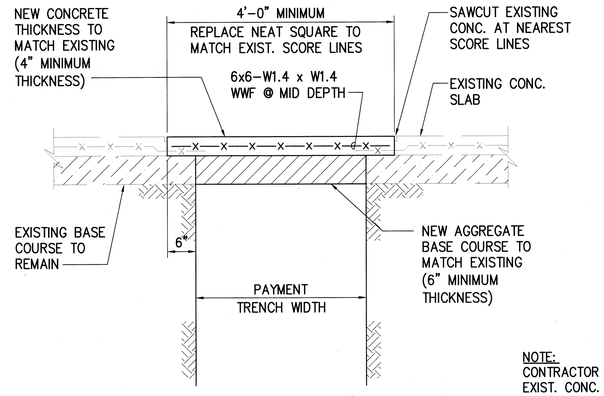

NOTE:
CONTRACTOR SHALL MATCH EXIST. CONC. WALKWAY PATTERNED SURFACE

2 TRENCH REPAVING DETAIL AT CONCRETE WALKWAY
C007 NOT TO SCALE

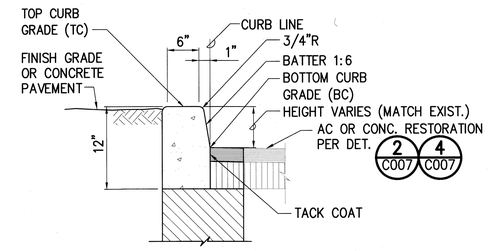

3 CONC. CURB RESTORATION DETAIL
C007 NOT TO SCALE

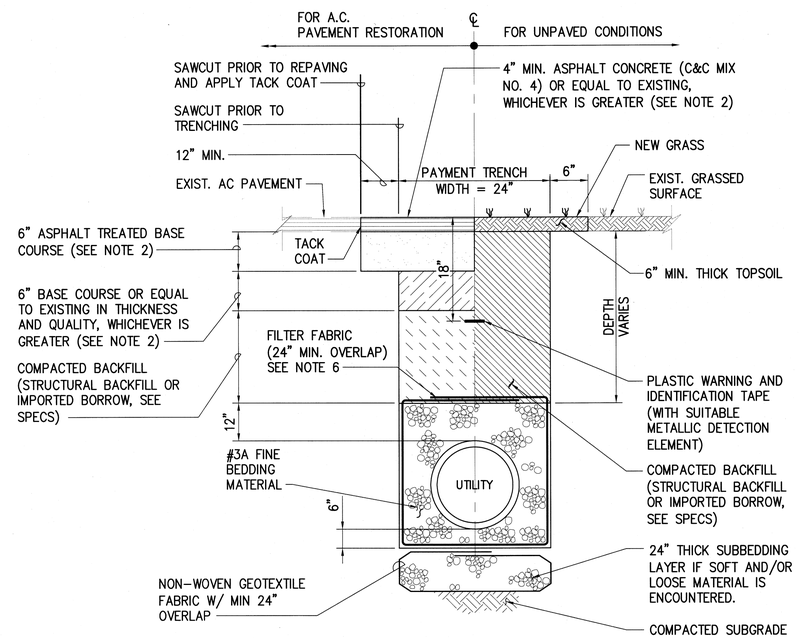

4 UTILITY TRENCH RESTORATION DETAIL
C007 NOT TO SCALE

TRENCH NOTES:
1. FOR TRENCH RESTORATION OF CONCRETE SIDEWALKS, SEE DET. 2 C007
2. PAVEMENT STRUCTURE SHALL BE EQUAL TO OR BETTER THAN EXISTING IN THICKNESS AND QUALITY.
3. PAVEMENT STRUCTURE SHALL BE: 4" ASPHALT CONCRETE (C&C MIX NO. 4), OVER 6" ASPHALT TREATED BASE COURSE, OVER 6" BASE COURSE, OR EQUAL TO OR BETTER THAN EXISTING.
4. THE EXISTING PAVEMENT MAY VARY IN THICKNESS. CONTRACTOR SHALL BE RESPONSIBLE FOR SAWCUTTING, EXCAVATION, DISPOSAL, AND RESTORATION OF AC PAVEMENT, REGARDLESS OF ACTUAL PAVEMENT THICKNESS AT NO ADDITIONAL COST TO THE STATE.
5. FOR VENT PIPE, PROVIDE 1.5' MIN. COVERAGE.
6. FILTER FABRIC REQUIRED AROUND BEDDING MATERIAL IF GROUNDWATER IS ENCOUNTERED.

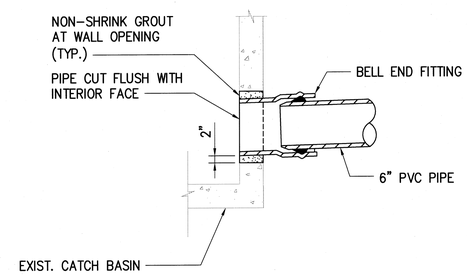

NOTES:
1. FOR PVC PIPE, PROVIDE PRE-MANUFACTURED, APPROVED PVC SANDED MANHOLE ADAPTER WITH GASKETED BELL END.
2. BELL END FITTING USED ON INFLUENT STORMWATER PIPE.

5 CATCH BASIN PENETRATION DETAIL
C007 NOT TO SCALE

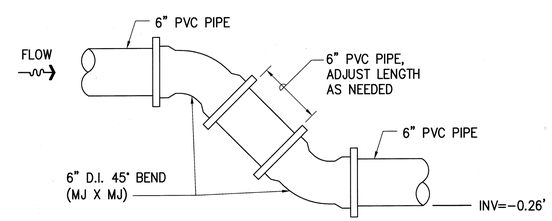

6 OFFSET ASSEMBLY
C007 NOT TO SCALE

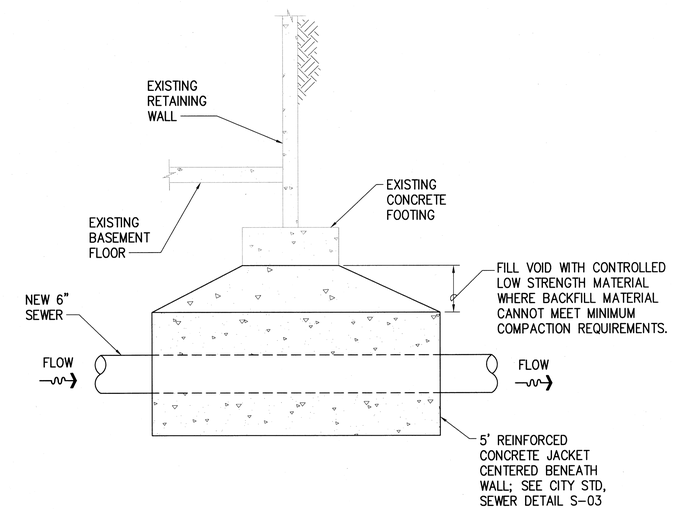

7 REINFORCED CONCRETE JACKET DETAIL
C007 NOT TO SCALE

REVISION NO.	SYM.	DESCRIPTION	SHT.___ OF___	DATE	APPROVED: ADMINISTRATIVE DIRECTOR OF COURTS

JASON H. LAU
LICENSED PROFESSIONAL ENGINEER
NO. 9360-C
HAWAII USA
EXPIRES: 4/30/20
THIS WORK WAS PREPARED BY ME OR UNDER MY SUPERVISION AND CONSTRUCTION OF THIS PROJECT WILL BE UNDER MY OBSERVATION
SIGNATURE

THE JUDICIARY
STATE OF HAWAI'I

KAPUAIWA BUILDING
SEPARATE STORM DRAIN AND BASEMENT
SANITARY SEWER SYSTEMS
HONOLULU, OAHU, HAWAII

DETAILS 1

DESIGNED BY: JK/KT	CHECKED BY: JL/JK	JUDICIARY PROJECT NO. 1718-07-014	DRAWING NO. C007
DRAWN BY: HH/SA/KT	APPROVED BY: JL	DATE NOV 2019	SHEET 14 OF 24 SHTS
SCALE: AS SHOWN			

FILE ____ DRAWER ____ FOLDER ____

L:\1. PROJECTS\03 - MISC\10313 - KAPUAIWA DRAINAGE DESIGN\DRAWINGS\DETAILS -BUILDING PERMT.DWG 11/26/2019 3:15 PM

Project: Kapuaiwa Building Pump Station Improvements Project Location: Honolulu, Oahu, Hawaii Project Number: 030218-00	**Kokua Geotech LLC** 94-974 Pakela Street, Suite 109 Waipahu, HI 96797 (808) 397-6974	Key to Log of Borings Sheet 1 of 1

Elevation (feet)	Depth (feet)	Sample Type	Sample Number	Sampling Resistance, blows/ft	U.S.C.S.	Graphic Log	MATERIAL DESCRIPTION	Pocket Pen./Torvane, tsf	Water Content, %	Dry Unit Weight, pcf	Remarks and Other Tests
1	2	3	4	5	6	7	8	9	10	11	12

COLUMN DESCRIPTIONS

1 Elevation (feet): Elevation (MSL, feet).
2 Depth (feet): Depth in feet below the ground surface.
3 Sample Type: Type of soil sample collected at the depth interval shown.
4 Sample Number: Sample identification number.
5 Sampling Resistance, blows/ft: Number of blows to advance driven sampler one foot (or distance shown) beyond seating interval using the hammer identified on the boring log.
6 U.S.C.S: Type of material encountered.
7 Graphic Log: Graphic depiction of the subsurface material encountered.
8 MATERIAL DESCRIPTION: Description of material encountered. May include consistency, moisture, color, and other descriptive text.
9 Pocket Pen./Torvane, tsf: the reading from Pocket Penetrometer or Torvane.
10 Water Content, %: Water content of the soil sample, expressed as percentage of dry weight of sample.
11 Dry Unit Weight, pcf: Dry weight per unit volume of soil sample measured in laboratory, in pounds per cubic foot.
12 Remarks and Other Tests: Other Tests

FIELD AND LABORATORY TEST ABBREVIATIONS

CHEM: Chemical tests to assess corrosivity
COMP: Compaction test
CONS: One-dimensional consolidation test
LL: Liquid Limit, percent
PI: Plasticity Index, percent
SA: Sieve analysis (percent passing No. 200 Sieve)
UC: Unconfined compressive strength test, Qu, in ksf
WA: Wash sieve (percent passing No. 200 Sieve)

MATERIAL GRAPHIC SYMBOLS

Fat CLAY, CLAY w/SAND, SANDY CLAY (CH)
Coral Formation
Silty SAND (SM)

TYPICAL SAMPLER GRAPHIC SYMBOLS

Auger sampler
Bulk Sample
CME Sampler
Grab Sample
HQ Coring
3-inch OD Modified California w/ brass liners
Pitcher Sample
PQ Coring
2-inch-OD unlined split spoon (SPT)
Shelby Tube (Thin-walled, fixed head)

OTHER GRAPHIC SYMBOLS

Water level (at time of drilling, ATD)
Water level (after waiting)
Minor change in material properties within a stratum
Inferred/gradational contact between strata
?— Queried contact between strata

GENERAL NOTES

1: Soil classifications are based on the Unified Soil Classification System. Descriptions and stratum lines are interpretive, and actual lithologic changes may be gradual. Field descriptions may have been modified to reflect results of lab tests.
2: Descriptions on these logs apply only at the specific boring locations and at the time the borings were advanced. They are not warranted to be representative of subsurface conditions at other locations or times.

PLATE A-0.1

Project: Kapuaiwa Building Pump Station Improvements Project Location: Honolulu, Oahu, Hawaii Project Number: 030218-00	**Kokua Geotech LLC** 94-974 Pakela Street, Suite 109 Waipahu, HI 96797 (808) 397-6974	Log of Boring No. 1 Sheet 1 of 2

Date(s) Drilled: 6/18/19	Logged By: JJP	Checked By: AJF	
Drilling Method: HS Auger	Drill Bit Size/Type: 8-inch Hollow Stem Auger	Total Depth of Borehole: 30.5 feet	
Drill Rig Type: Mobile B-53	Drilling Contractor: Kokua Geotech LLC	Approximate Surface Elevation: +9 feet MSL*	
Groundwater Level and Date Measured: 9.2 feet @ 12:20 PM 6/18/19	Sampling Method(s): MCS & SPT	Hammer Data: 140 lbs. with 30-inch drop	
Borehole Backfill: Soil Cuttings and Gravel	Location: See Site Plan (Plate 2)		

Elevation (feet)	Depth (feet)	Sample Type	Sample Number	Sampling Resistance, blows/ft	U.S.C.S.	Graphic Log	MATERIAL DESCRIPTION	Pocket Pen./Torvane, tsf	Water Content, %	Dry Unit Weight, pcf	Remarks and Other Tests
9	0				CH		Brown SILTY CLAY with some sand and gravel, stiff, moist (fill)				
			1	29					16	92	
			2	10	SM		Dark brown SILTY SAND with a little gravel, loose, moist (alluvium)		12		LL=33, PI=6
4	5		3	13					16	88	
-1	10		4	60/6"			Grayish tan CORAL, moderately weathered, medium hard to hard (coral formation)		28		Sieve #200=23.8%
-6	15		5	20/6" +100" Ref.					33		
					SM		Light tan SILTY SAND with some gravel (coralline), medium dense (coralline detritus)				
-11	20		6	24					29		
-16	25						Light tan CORAL, moderately weathered, medium hard to hard (coral formation)				

PLATE A-1

Project: Kapuaiwa Building Pump Station Improvements Project Location: Honolulu, Oahu, Hawaii Project Number: 030218-00	**Kokua Geotech LLC** 94-974 Pakela Street, Suite 109 Waipahu, HI 96797 (808) 397-6974	Log of Boring No. 1 Sheet 2 of 2

Date(s) Drilled: 6/18/19	Logged By: JJP	Checked By: AJF	
Drilling Method: HS Auger	Drill Bit Size/Type: 8-inch Hollow Stem Auger	Total Depth of Borehole: 30.5 feet	
Drill Rig Type: Mobile B-53	Drilling Contractor: Kokua Geotech LLC	Approximate Surface Elevation: +9 feet MSL*	
Groundwater Level and Date Measured: 9.2 feet @ 12:20 PM 6/18/19	Sampling Method(s): MCS & SPT	Hammer Data: 140 lbs. with 30-inch drop	
Borehole Backfill: Soil Cuttings and Gravel	Location: See Site Plan (Plate 2)		

Elevation (feet)	Depth (feet)	Sample Type	Sample Number	Sampling Resistance, blows/ft	U.S.C.S.	Graphic Log	MATERIAL DESCRIPTION	Pocket Pen./Torvane, tsf	Water Content, %	Dry Unit Weight, pcf	Remarks and Other Tests
-16	25		7	40			Light tan CORAL, moderately weathered, medium hard to hard (coral formation)		28		
-21	30		8	24/6" +200" Ref.					38		
							Boring terminated at approximately 30.5 feet below the existing ground surface				
							*Elevation of boring estimated from Google Earth imagery				
-26	35										
-31	40										
-36	45										
-41	50										

PLATE A-1

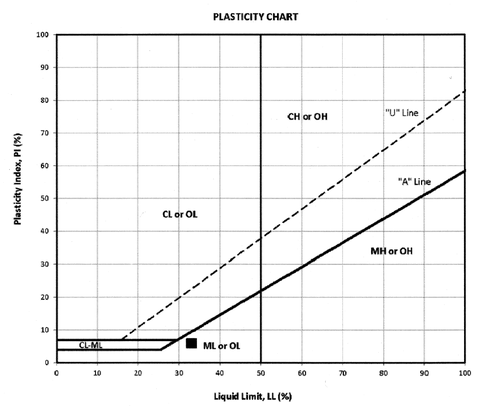

Symbol	Sample	Depth (feet)	Material Description	USCS	LL	PL	PI
■	B-1	2.5 to 4.0	Dark brown SILTY SAND with a little gravel	SM	33	27	6

SUMMARY OF ATTERBERG LIMITS (ASTM D4318) TEST RESULTS

Kokua Geotech LLC Soil and Foundation Engineering	KAPUAIWA BUILDING PUMP STATION IMPROVEMENTS 426 QUEEN STREET HONOLULU, OAHU, HAWAII	
	PROJECT NO.: 030218-00	PLATE
	DATE: JULY 2019	B-1

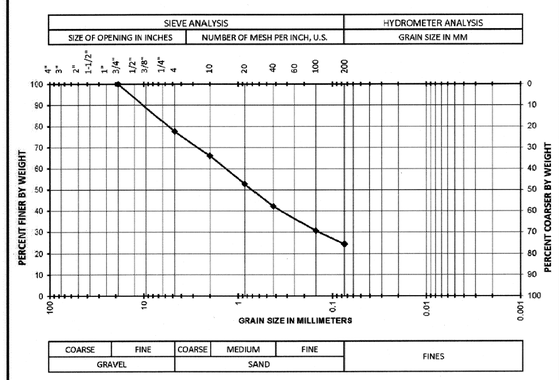

Sample	Depth (feet)	USCS	Description
B-1	10.0 to 11.5	SM	Tan SILTY SAND with gravel (coralline)

SUMMARY OF GRAIN SIZE DISTRIBUTION (ASTM C117 & C136) TEST RESULTS

Kokua Geotech LLC Soil and Foundation Engineering	KAPUAIWA BUILDING PUMP STATION IMPROVEMENTS 426 QUEEN STREET HONOLULU, OAHU, HAWAII	
	PROJECT NO.: 030218-00	PLATE
	DATE: JULY 2019	B-2

REVISION NO.	SYM.	DESCRIPTION	SHT.___ OF___	DATE	APPROVED: ADMINISTRATIVE DIRECTOR OF COURTS

JASON H. LAU
LICENSED PROFESSIONAL ENGINEER
NO. 9360-C
HAWAII USA
EXPIRES: 4/30/20

THIS WORK WAS PREPARED BY ME OR UNDER MY SUPERVISION AND CONSTRUCTION OF THIS PROJECT WILL BE UNDER MY OBSERVATION

SIGNATURE

THE JUDICIARY
STATE OF HAWAI'I

KAPUAIWA BUILDING
SEPARATE STORM DRAIN AND BASEMENT
SANITARY SEWER SYSTEMS
HONOLULU, OAHU, HAWAII

BORING LOG DATA

DESIGNED BY: JK/KT	CHECKED BY: JL/JK	JUDICIARY PROJECT NO. 1718-07-014	DRAWING NO. C008
DRAWN BY: HH/SA/KT	APPROVED BY: JL	DATE NOV 2019	SHEET 15 OF 24 SHTS
SCALE: AS SHOWN			

FILE ____ DRAWER ____ FOLDER ____

L:\1 PROJECTS\03 - MISC\1313 - KAPUAIWA DRAINAGE DESIGN\DRAWINGS\BORING LOG DATA.DWG 11/25/2019 7:24 PM

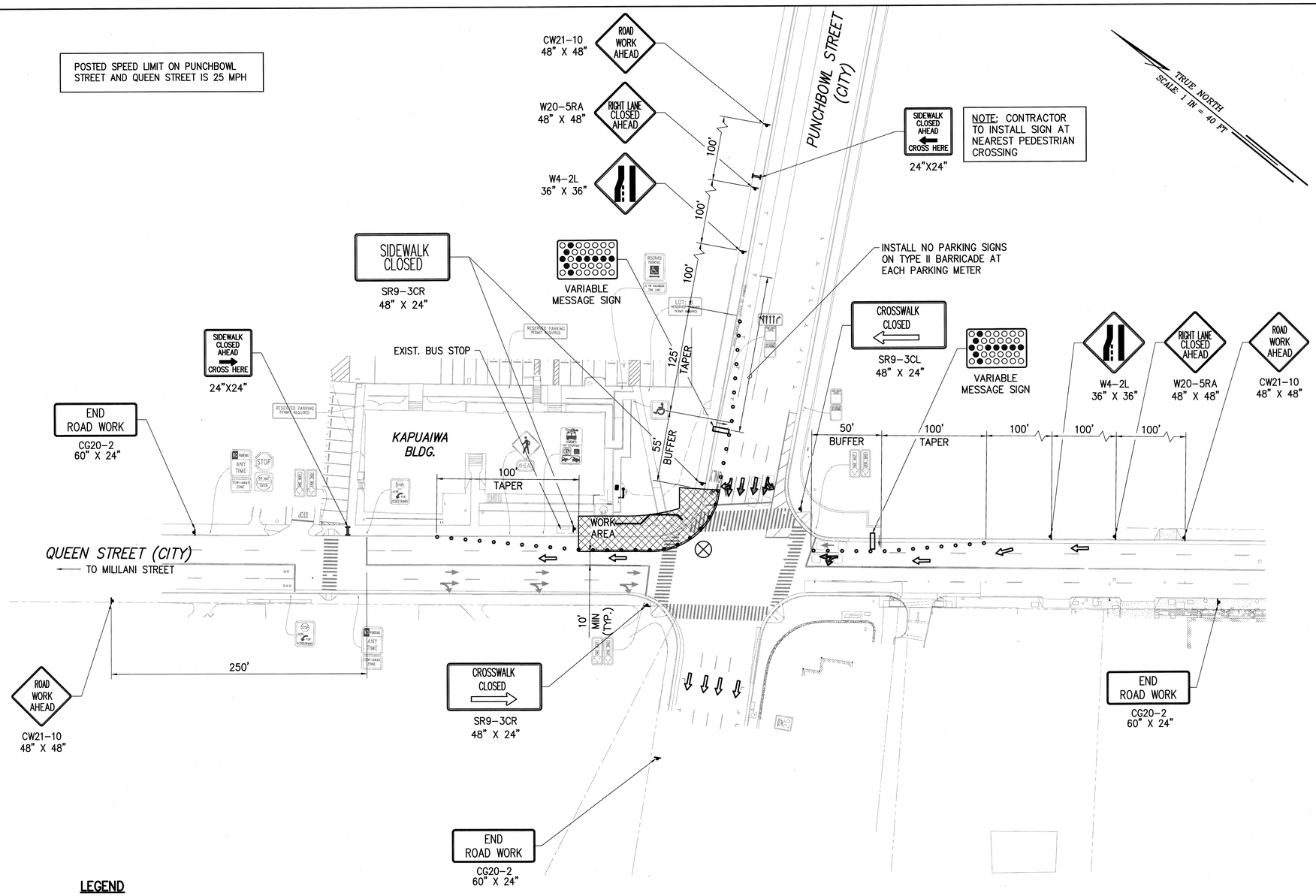

GENERAL NOTES FOR TRAFFIC CONTROL PLAN (ON CITY AND COUNTY STREETS):

1. THE PERMITTEE SHALL MAKE MINOR ADJUSTMENTS AT INTERSECTIONS, DRIVEWAYS, BRIDGES, STRUCTURES, ETC., TO FIT FIELD CONDITIONS.
2. CONES OR DELINEATORS SHALL BE EXTENDED TO A POINT WHERE THEY ARE VISIBLE TO APPROACHING TRAFFIC.
3. TRAFFIC CONTROL DEVICES SHALL BE INSTALLED SUCH THAT THE SIGN OR DEVICE FARTHEST FROM THE WORK AREA IS PLACED FIRST. THE OTHERS SHALL THEN BE PLACED PROGRESSIVELY TOWARD THE WORK AREA.
4. REGULATORY AND WARNING SIGNS WITHIN THE CONSTRUCTION ZONE THAT ARE IN CONFLICT WITH THE TRAFFIC CONTROL PLANS SHALL BE REMOVED OR COVERED.
5. WHEN REQUIRED BY THE ISSUING OFFICE, THE PERMITTEE SHALL INSTALL A FLASHING ARROW SIGNAL AS SHOWN ON THE TRAFFIC CONTROL PLANS.
6. ALL TRAFFIC LANES SHALL BE A MINIMUM OF 10 FEET WIDE.
7. ALL CONSTRUCTION WARNING SIGNS SHALL BE PROMPTLY REMOVED OR COVERED WHENEVER THE MESSAGE IS NOT APPLICABLE OR NOT IN USE.
8. THE BACKS OF ALL SIGNS USED FOR TRAFFIC CONTROL SHALL BE APPROPRIATELY COVERED TO PRECLUDE THE DISPLAY OF INAPPLICABLE SIGN MESSAGES (I.E., WHEN SIGNS HAVE MESSAGES ON BOTH FACES).
9. LANE CLOSURE SHALL BE LIMITED ONLY TO THE EXTENT OF ACCOMPLISHING EACH DAY'S WORK. AS SOON AS EACH DAY'S WORK IS COMPLETED, THE PERMITTEE SHALL REMOVE ALL TRAFFIC CONTROL DEVICES NO LONGER NEEDED TO PERMIT FREE AND SAFE PASSAGE OF PUBLIC TRAFFIC. REMOVAL SHALL BE IN THE REVERSE ORDER OF INSTALLATION. EXISTING FADED OR OBLITERATED PAVEMENT MARKINGS THAT ARE NECESSARY FOR SAFE TRAFFIC FLOW IN THE CONSTRUCTION AREA SHALL BE REPLACED WITH TEMPORARY OR PERMANENT MARKINGS BEFORE OPENING THE ROADWAY TO PUBLIC TRAFFIC EACH DAY.
10. PERMANENT PAVEMENT MARKINGS AND TRAFFIC SIGNS SHALL BE REPLACED UPON COMPLETION OF EACH PHASE OF WORK.
11. CONES AND DELINEATORS SHALL BE SPACED AT A MAXIMUM DISTANCE OF 20 FEET APART. A MINIMUM OF SIX CHANNELIZING DEVICES SHALL BE USED FOR EACH TAPER LENGTH.
12. DRIVEWAYS SHALL BE KEPT OPEN UNLESS THE OWNERS OF THE PROPERTY USING THE RIGHT-OF-WAY ARE OTHERWISE PROVIDED FOR SATISFACTORILY. FURTHER, THE PERMITTEE SHALL CONTROL TRAFFIC GOING IN AND OUT OF DRIVEWAYS.
13. BUFFER AND TAPER AREAS ON APPROACH TO ANY WORK AREA SHALL BE KEPT CLEAR OF VEHICLES AND EQUIPMENT.
14. "NO PARKING" SIGNS SHALL BE POSTED WITHIN ANY WORK AREA AND FOR THE BUFFER AND TAPER AREAS APPROACHING THE WORK AREA.
15. TRAFFIC CONTROL PLANS ARE APPROVED FOR WORK ON ANY CITY STREET AREA BETWEEN THE HOURS OF 8:30 A.M. AND 3:30 P.M. MONDAY THROUGH FRIDAY EXCEPT HOLIDAYS.

LEGEND

- 28"H CONE WITH REFLECTIVE COLLAR (DOUBLE UP TO INCREASE STABILITY)
- TYPE II BARRICADE WITH AMBER STEADY BURN
- DIRECTION OF TRAFFIC FLOW
- SIGN
- WORK AREA
- POLICE OFFICER
- VARIABLE MESSAGE SIGN

CONE, DELINEATOR, AND BARRICADE SPACING:
10' O.C. FOR WORK AREAS
20' O.C. FOR TAPERS AND BUFFERS

TRAFFIC CONTROL PLAN

SCALE: 1"=40'

PUBLIC TRANSIT AUTHORITY NOTE:
THE CONTRACTOR SHALL NOTIFY, THE DEPARTMENT OF TRANSPORTATION SERVICES AND THE OAHU TRANSIT SERVICES, OF THE SCOPE OF WORK, LOCATION, PROPOSED CLOSURE OF ANY STREET, TRAFFIC LANE, OR BUS STOP AND DURATION OF PROJECT, AT LEAST TWO WEEKS PRIOR TO CONSTRUCTION.

DEPARTMENT OF TRANSPORTATION SERVICES, PUBLIC TRANSIT DIVISION:
768-8396 AND THEBUSSTOP@HONOLULU.GOV

OAHU TRANSIT SERVICES:
BUS OPERATIONS: 848-4571 AND 848-4565 AND
FIELD_OPERATION_MGR@THEBUS.ORG
PARA-TRANSIT OPERATIONS 454-5006 AND 454-5083.

APPROVED:

CHIEF, TRAFFIC REVIEW BRANCH, DPP ~~V.A.~~ — DATE 1/15/20

REVISION NO.	SYM.	DESCRIPTION	SHT.___ OF___	DATE	APPROVED: ADMINISTRATIVE DIRECTOR OF COURTS

JASON H. LAU LICENSED PROFESSIONAL ENGINEER NO. 9360-C HAWAII USA
EXPIRES: 4/30/20
THIS WORK WAS PREPARED BY ME OR UNDER MY SUPERVISION AND CONSTRUCTION OF THIS PROJECT WILL BE UNDER MY OBSERVATION
SIGNATURE

THE JUDICIARY
STATE OF HAWAI'I

KAPUAIWA BUILDING
SEPARATE STORM DRAIN AND BASEMENT
SANITARY SEWER SYSTEMS
HONOLULU, OAHU, HAWAII

TRAFFIC CONTROL PLAN

DESIGNED BY: JK/KT	CHECKED BY: JL/JK	JUDICIARY PROJECT NO. 1718-07-014	DRAWING NO. TC001
DRAWN BY: HH/SA/KT	APPROVED BY: JL	DATE NOV 2019	SHEET 16 OF 24 SHTS
SCALE: AS SHOWN			

FILE ____ DRAWER ____ FOLDER ____

L:\I. PROJECTS\03 - MISC\10313 - KAPUAIWA DRAINAGE DESIGN\DRAWINGS\TCP - BUILDING.DWG 11/14/2019 5:02 PM

GENERAL STRUCTURAL NOTES

1. DISCREPANCIES – CONTRACTOR SHALL VERIFY ALL DIMENSIONS, LOCATIONS OF UNDERGROUND UTILITIES AND CONDITIONS AND SHALL REPORT ANY DISCREPANCIES AND INCONSISTENCIES IN WRITING TO THE CONTRACTING OFFICER BEFORE COMMENCING WORK OR ORDERING MATERIALS.
2. ALL MATERIALS AND WORKMANSHIP SHALL CONFORM TO THE REQUIREMENTS OF THE 2006 IBC IN ADDITION TO OTHER CODES CITED.
3. DETAILS SHOWN ON DRAWINGS SHALL BE TYPICAL FOR ALL SIMILAR CONDITIONS. MODIFY DETAILS FOR SPECIAL CONDITIONS AS DIRECTED BY THE CONTRACTING OFFICER.
4. THE CONTRACTOR SHALL BE FULLY RESPONSIBLE FOR METHODS OF CONSTRUCTION, WORKMANSHIP, AND JOB SAFETY INCLUDING ALL FALSEWORK, BRACINGS, AND OTHER TEMPORARY ITEMS USED FOR THE CONSTRUCTION OF THE PROJECT.
5. THE CONTRACTOR SHALL NOTIFY THE CONTRACTING OFFICER AT LEAST 3 WORKING DAYS IN ADVANCE FOR REVIEW AND OBSERVATION OF EXCAVATIONS, REINFORCING, AND CONCRETE POURS.
6. CONCRETE: MINIMUM 28–DAY COMPRESSIVE STRENGTH OF 4,000 PSI; WATER/CEMENT RATIO EQUAL TO 0.40.
7. REINFORCING STEEL: ASTM A615, GRADE 60, ZINC–COATED (GALVANIZED) CONFORMING TO ASTM A767, CLASS I WITH GALVANIZING AFTER FABRICATION.
8. DOWELS SHALL BE SAME SIZE AND SPACING AND SHALL BE IN THE SAME PLANE AS THE BARS TO WHICH THEY ARE SPLICED UNLESS OTHERWISE INDICATED.
9. SPLICES AND EMBEDMENT LENGTHS SHALL BE A MINIMUM OF 64 BAR DIAMETERS UNLESS OTHERWISE INDICATED. IF THERE IS INSUFFICIENT DEPTH TO OBTAIN PROPER EMBEDMENT, EXTEND DOWEL TO FAR FACE OF MEMBER AND HOOK UNLESS OTHERWISE DIRECTED BY THE CONTRACTING OFFICER.
10. REINFORCING BENDS AND HOOKS SHALL CONFORM TO ACI 318–05.

ABBREVIATIONS

CAP	CAPACITY
CLR	CLEAR
CONC	CONCRETE
CONT	CONTINUOUS
(E)	EXISTING
EF	EACH FACE
EW	EACH WAY
FIN	FINISH
LB	POUND
MIN	MINIMUM
OPNG	OPENING
PJF	PRE–MOLDED JOINT FILLER
SQ	SQUARE
SS	STAINLESS STEEL
T&B	TOP AND BOTTOM
TYP	TYPICAL
VERT	VERTICAL

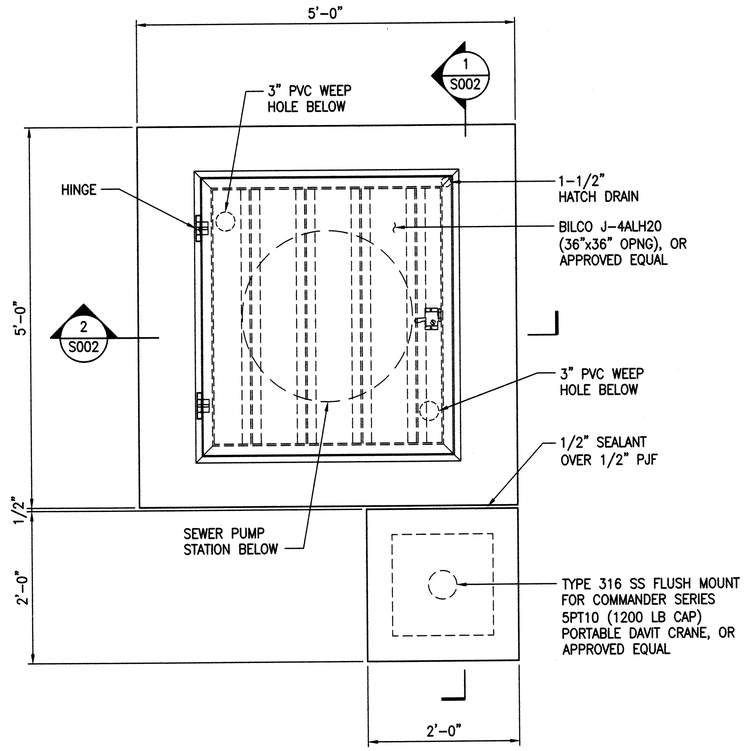

A PLAN
SCALE: 1" = 1'–0"

GRAPHIC SCALE

0 3" 6" 1' 2' 3'

1"=1'–0"

REVISION NO.	SYM.	DESCRIPTION	SHT. OF	DATE	APPROVED: ADMINISTRATIVE DIRECTOR OF COURTS

DWIGHT M. OKAWA
LICENSED PROFESSIONAL ENGINEER
NO. 4545–S
HAWAII, U.S.A.

EXPIRES: 4/30/20

THIS WORK WAS PREPARED BY ME OR UNDER MY SUPERVISION AND CONSTRUCTION OF THIS PROJECT WILL BE UNDER MY OBSERVATION

SIGNATURE

THE JUDICIARY
STATE OF HAWAI'I

KAPUAIWA BUILDING
SEPARATE STORM DRAIN AND BASEMENT
SANITARY SEWER SYSTEMS
HONOLULU, OAHU, HAWAII

STRUCTURAL NOTES AND PLAN

DESIGNED BY: DO	CHECKED BY: DO	JUDICIARY PROJECT NO. 1718–07–014	DRAWING NO. S001
DRAWN BY: LL/SE	APPROVED BY: DO	DATE NOV 2019	SHEET 17 OF 24 SHTS
SCALE: AS SHOWN			

FILE ____ DRAWER ____ FOLDER ____

F:\18JOB.DWG\18059 KAPUAIWA BDLG DRAIN-SEWER\DWG\STRUCT\DWG_18059\DRAWINGS.DWG 11/25/2019 4:13 PM

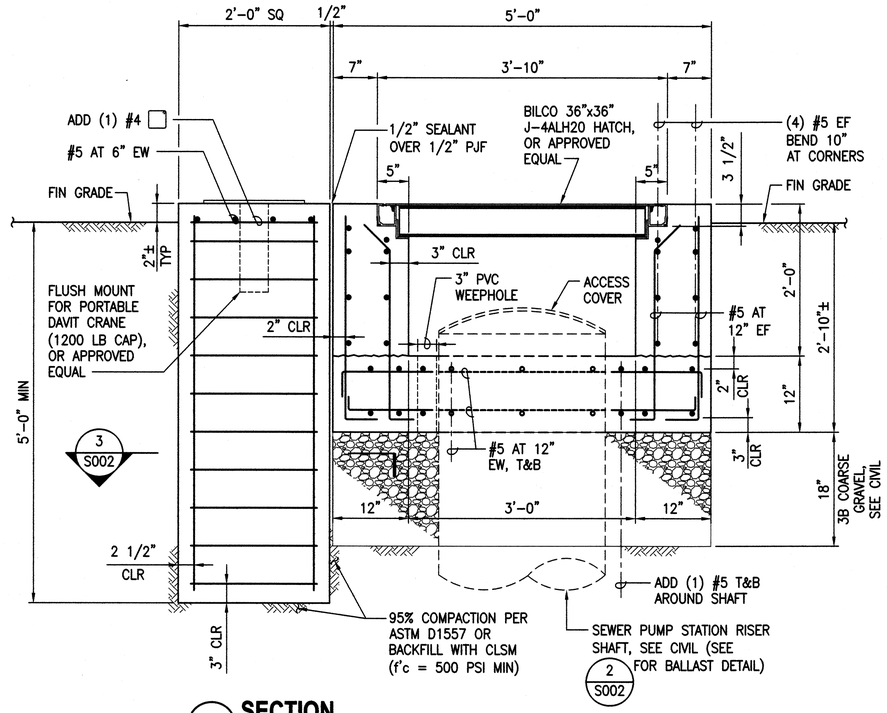

1 SECTION
SCALE: 1" = 1'-0"

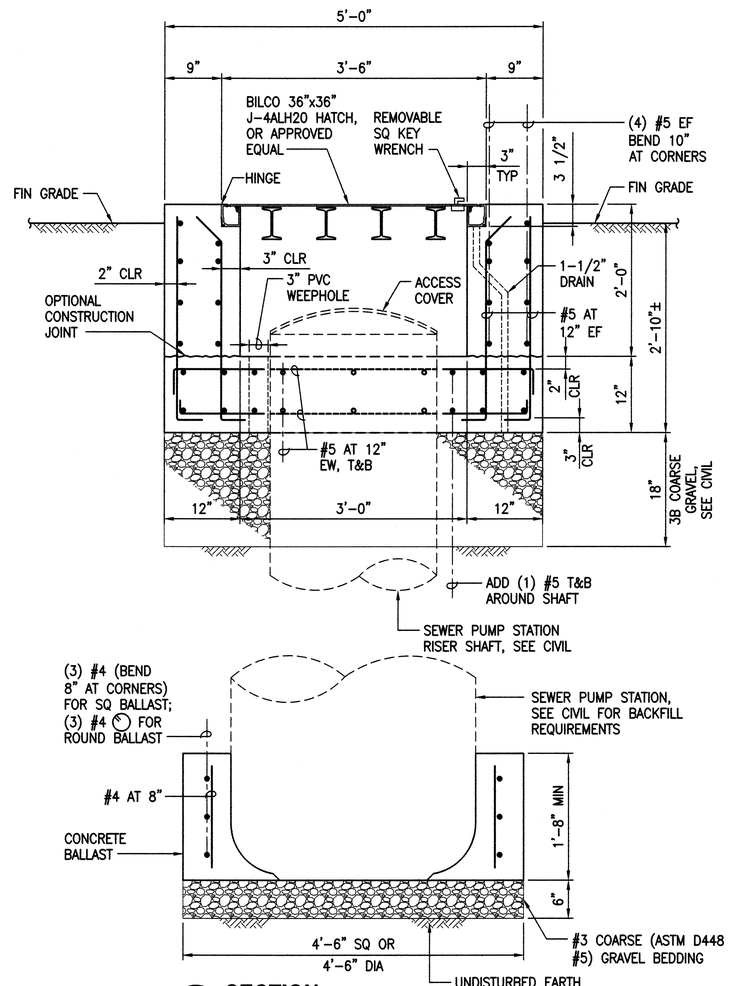

2 SECTION
SCALE: 1" = 1'-0"

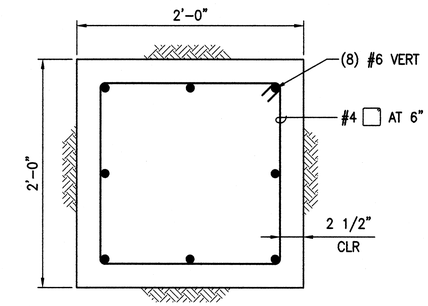

PLAN

3 SECTION
SCALE: 1-1/2" = 1'-0"

GRAPHIC SCALE

0 3" 6" 1' 2' 3'
1"=1'-0"

0 3" 6" 1' 2'
1-1/2"=1'-0"

REVISION NO.	SYM.	DESCRIPTION	SHT. OF	DATE	APPROVED: ADMINISTRATIVE DIRECTOR OF COURTS

DWIGHT M. OKAWA
LICENSED PROFESSIONAL ENGINEER
NO. 4545-S
HAWAII, U.S.A.
EXPIRES: 4/30/20

THIS WORK WAS PREPARED BY ME OR UNDER MY SUPERVISION AND CONSTRUCTION OF THIS PROJECT WILL BE UNDER MY OBSERVATION

SIGNATURE

THE JUDICIARY
STATE OF HAWAI'I

KAPUAIWA BUILDING
SEPARATE STORM DRAIN AND BASEMENT
SANITARY SEWER SYSTEMS
HONOLULU, OAHU, HAWAII

SECTIONS

DESIGNED BY: DO	CHECKED BY: DO	JUDICIARY PROJECT NO. 1718-07-014	DRAWING NO. S002
DRAWN BY: LL/SE	APPROVED BY: DO	DATE NOV 2019	SHEET 18 OF 24 SHTS
SCALE: AS SHOWN			

FILE ____ DRAWER ____ FOLDER ____

F:\18JOB.DWG\18059 KAPUAIWA BDLG DRAIN-SEWER\DWGS\STRUCTDWG_18059\DRAWINGS.DWG 11/25/2019 4:13 PM

GENERAL NOTES:

1. PLANS DO NOT INDICATE COMPLETE EXISTING ELECTRICAL CONDITIONS. CONTRACTOR SHALL VISIT JOBSITE TO BECOME FAMILIAR WITH ALL EXISTING CONDITIONS AND EXTENT OF DEMOLITION AND NEW WORK PRIOR TO THE START OF CONSTRUCTION.

2. PRIOR TO THE START OF CONSTRUCTION, CONTRACTOR SHALL VISIT JOBSITE AND REPORT ANY DISCREPANCIES AND/OR DIFFERENCE IN DRAWINGS, WITH RESPECT TO EXISTING CONDITIONS, TO THE CONTRACTING OFFICER.

3. CONTRACTOR SHALL RESOLVE ALL DISCREPANCIES AND QUESTIONS PRIOR TO THE START OF WORK. NO EXTRA PAYMENT SHALL BE ALLOWED ON ACCOUNT OF WORK MADE NECESSARY BY CONTRACTOR'S FAILURE TO VISIT THE SITE AND/OR FAILURE TO RESOLVE DISCREPANCIES AND QUESTIONS.

5. BEFORE ANY ELECTRICAL WIRING IS CUT, CONTRACTOR SHALL VERIFY USAGE OF WIRING TO ENSURE THAT REQUIRED SERVICES ARE NOT DISCONTINUED.

6. REMOVE ALL EXISTING EXPOSED CONDUIT AND WIRES NOT TO REMAIN IN SERVICE; CONCEALED RACEWAYS NO LONGER REQUIRED SHALL BE CUT, CAPPED AND ABANDONED IN PLACE WITH ALL WIRES REMOVED.

7. PROVIDE METAL SEALS FOR ALL ABANDONED RACEWAY OPENINGS IN BOXES, CABINETS, AND EQUIPMENT ENCLOSURES; SEALS SHALL RETAIN NEMA RATING OF REMAINING BOXES, CABINETS, AND EQUIPMENT ENCLOSURES.

8. RETURN ALL SALVAGEABLE APPARATUS, AS DETERMINED BY THE STATE OR ITS REPRESENTATIVES, TO A SITE DESIGNATED BY THE STATE OR ITS REPRESENTATIVES, AT NO ADDITIONAL COST TO THE STATE. DISPOSE OF ALL UNWANTED MATERIALS.

9. PRIOR TO PENETRATING OR DISTURBING ANY SURFACES IDENTIFIED AS CONTAINING HAZARDOUS MATERIALS, HAVE SURFACE/MATERIAL ABATED OR TREATED SO AS NOT TO CONTAMINATE SPACE OR AREA. REFER TO HAZARDOUS MATERIAL HANDLING REQUIREMENTS.

GENERAL CONSTRUCTION NOTES:

1. PROVIDE POLYOLEFIN 200LB TEST PULLCORD IN ALL EMPTY CONDUITS, UNLESS OTHERWISE NOTED.

2. ALL ELECTRICAL EQUIPMENT ENCLOSURES AND EQUIPMENT MOUNTING HARDWARE FOR OUTDOOR INSTALLATION SHALL BE TYPE 316 STAINLESS STEEL, UNLESS OTHERWISE NOTED.

ELECTRICAL SYMBOLS

SYMBOL	DESCRIPTION
	ELECTRICAL PANELBOARD
J	JUNCTION BOX, CEIL. MTD., 4-11/16" NOM.
J	JUNCTION BOX, WALL MTD., 4-11/16" NOM.
M	MOTOR CONNECTION
E	EQUIPMENT CONNECTION
	CONDUIT BODY; HEIGHT AS REQUIRED
	FLEXIBLE CONDUIT, LIQUIDTIGHT
	CONDUIT OR DUCTLINE BELOW REF. FL. OR GROUND
	EXPOSED CONDUIT
	EXISTING DUCTLINE
	CONDUIT STUB-OUT
A C 2-4E 1-2T	ELECTRIC/SIGNAL DUCTLINE WITH DESIGNATORS; ITEMS IN CIRCLE INDICATES DUCT SECTION TYPE, WITH DUCT COMPLEMENTS NOTED BELOW (TYPE "A" DUCT INDICATED WITH 2-4"E DUCTS, AND TYPE "C" DUCT WITH 1-2"T DUCT; E=ELECTRIC, T=TELEPHONE, A=ANTENNA CABLE C=CONTROLS, I=INSTRUMENTATION); SEE SHEET E002 FOR DUCT SECTION DETAILS AND REQUIREMENTS
WP	DENOTES "WEATHERPROOF"
SS	DENOTES "TYPE 316 STAINLESS STEEL"

NOTES:

1. UNLESS OTHERWISE NOTES, DASHED SYMBOLS DENOTE "EXISTING" ITEMS, SOLID SYMBOLS DENOTES "NEW" ITEMS.

2. "X" THROUGH SYMBOL DENOTES EXISTING ITEM TO BE REMOVED, OR AS NOTED.

3. ALL ITEMS SHOWN ON DRAWINGS SHALL BE NEW UNLESS OTHERWISE INDICATED.

REVISION NO.	SYM.	DESCRIPTION	SHT. OF	DATE	APPROVED: ADMINISTRATIVE DIRECTOR OF COURTS

BILLY J. ORNELAS
LICENSED PROFESSIONAL ENGINEER
No. 11658-E
HAWAII, U.S.A.

EXPIRES: 4/30/20

THIS WORK WAS PREPARED BY ME OR UNDER MY SUPERVISION AND CONSTRUCTION OF THIS PROJECT WILL BE UNDER MY OBSERVATION

SIGNATURE

THE JUDICIARY
STATE OF HAWAI'I

KAPUAIWA BUILDING
SEPARATE STORM DRAIN AND BASEMENT
SANITARY SEWER SYSTEMS
HONOLULU, OAHU, HAWAII

ELECTRICAL SYMBOLS AND GENERAL NOTES

DESIGNED BY: YS	CHECKED BY: BJO	JUDICIARY PROJECT NO. 1718-07-014	DRAWING NO. E001
DRAWN BY: YS	APPROVED BY: BJO	DATE JAN 2020	SHEET 19 OF 24 SHTS
SCALE: AS SHOWN			

FILE _____ DRAWER _____ FOLDER _____

Z:\ACAD\PROJECTS\218103\E001-218103-SYMBOLS.DWG 1/10/2020 1:58 PM

DUCT SECTION BACKFILL NOTES:

TYPE "A" BACKFILL – EARTH & GRAVEL. ROCK SIZE TO BE 1" MAX. & THE MIXTURE TO CONTAIN NOT MORE THAN 50% BY VOLUME OF ROCK PARTICLES. 95% COMPACTION.

TYPE "B" BACKFILL – EARTH & GRAVEL. MIXTURE MUST PASS A 1/2" MESH SCREEN & CONTAIN NOT MORE THAN 20% BY VOLUME OF ROCK PARTICLES. 95% COMPACTION.

NOTE – IF NORMAL MATERIAL AT BOTTOM OF TRENCH IS NOT TYPE "B", AN ADDITIONAL 3" SHALL BE EXCAVATED & TYPE "B" BACKFILL PROVIDED.

CONCRETE – 3" ENCASEMENT, 3000 psi COMPRESSIVE STRENGTH @ 28 DAYS.

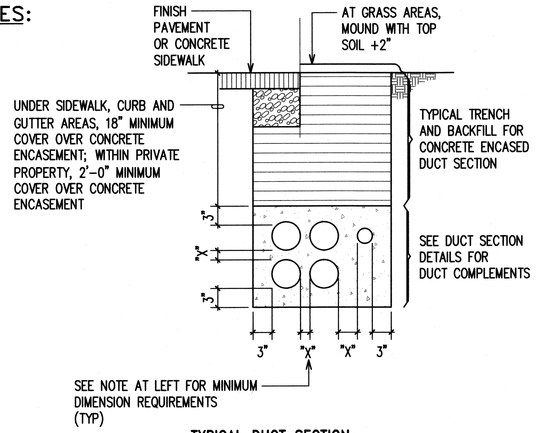

TYPICAL DUCT SECTION

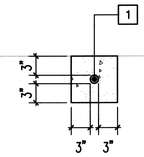

SECTION (A)

DUCT SECTION DETAILS AND REQUIREMENTS

NOT TO SCALE

DESIGNATION DESCRIPTIONS

ELEC = UTILITY CO. PRIMARY OR SECONDARY ELECTRIC
TEL = UTILITY CO. TELEPHONE
PWR = PRIMARY OR SECONDARY ELECTRIC
CTL = CONTROL
SIG = INSTRUMENTATION OR ANTENNA CABLE

MINIMUM "X" DIMENSION
DUCT SEPARATION REQUIREMENTS

ELEC – ELEC = 1 1/2"

ELEC – TEL = 3"

TEL – TEL = 1 1/2"

ELEC – CTL/SIG = 3"

TEL – CTL/SIG = 1 1/2"

PWR – CTL/SIG = 3"

ELEC – PWR = 1 1/2"

TEL – PWR = 3"

PWR – PWR = 1 1/2"

CTL/SIG – CTL/SIG = 1 1/2"

MINIMUM OF 3" CONCRETE ENCASEMENT AROUND DUCTBANK

WHERE DUCTLINE CROSSES OVER WATER LINE, PROVIDE THE FOLLOWING:

1. 6" MINIMUM SEPARATION BETWEEN DUCTLINES AND WATER LINE.
2. PROVIDE CONCRETE JACKET AROUND DUCTLINES.
3. PROVIDE ONLY TYPE "B" BACKFILL AROUND WATER LINE.

DUCT AND WIRE SCHEDULE

NO.	DUCT SIZE	WIRE SIZE	DESTINATION OR USE
1	1"	PUMP CABLE	PUMP CABLE FROM PUMP CONTROL PANEL TO PUMP MOTOR
2			
3			
4			
5			
6			
7			
8			

NOTES:
1. ALL CONCRETE ENCASED DUCTS IN AND ENTERING CLASS 1 DIV 1 HAZARDOUS LOCATIONS SHALL BE GALVANIZED RIGID STEEL CONDUIT.
2. ALL CONCRETE ENCASED DUCTS STRICTLY IN NON-HAZARDOUS LOCATIONS SHALL BE SCHEDULE 40 PVC.
3. PC INDICATED PROVIDE PULLCORD.

REVISION NO.	SYM.	DESCRIPTION	SHT. OF	DATE	APPROVED: ADMINISTRATIVE DIRECTOR OF COURTS

BILLY J. ORNELLAS
LICENSED PROFESSIONAL ENGINEER
No. 11658-E
HAWAII, U.S.A.

EXPIRES: 4/30/20

THIS WORK WAS PREPARED BY ME OR UNDER MY SUPERVISION AND CONSTRUCTION OF THIS PROJECT WILL BE UNDER MY OBSERVATION

SIGNATURE

THE JUDICIARY
STATE OF HAWAI'I

KAPUAIWA BUILDING
SEPARATE STORM DRAIN AND BASEMENT SANITARY SEWER SYSTEMS
HONOLULU, OAHU, HAWAII

DUCT SECTION DETAILS AND REQUIREMENTS

DESIGNED BY: YS	CHECKED BY: BJO	JUDICIARY PROJECT NO. 1718-07-014	DRAWING NO. E002
DRAWN BY: YS	APPROVED BY: BJO	DATE JAN 2020	SHEET 20 OF 24 SHTS
SCALE: AS SHOWN			

FILE ____ DRAWER ____ FOLDER ____

Z:\ACAD\PROJECTS\218103\E002-218103-DUCT SECTION DETAILS.DWG 1/10/2020 1:54 PM

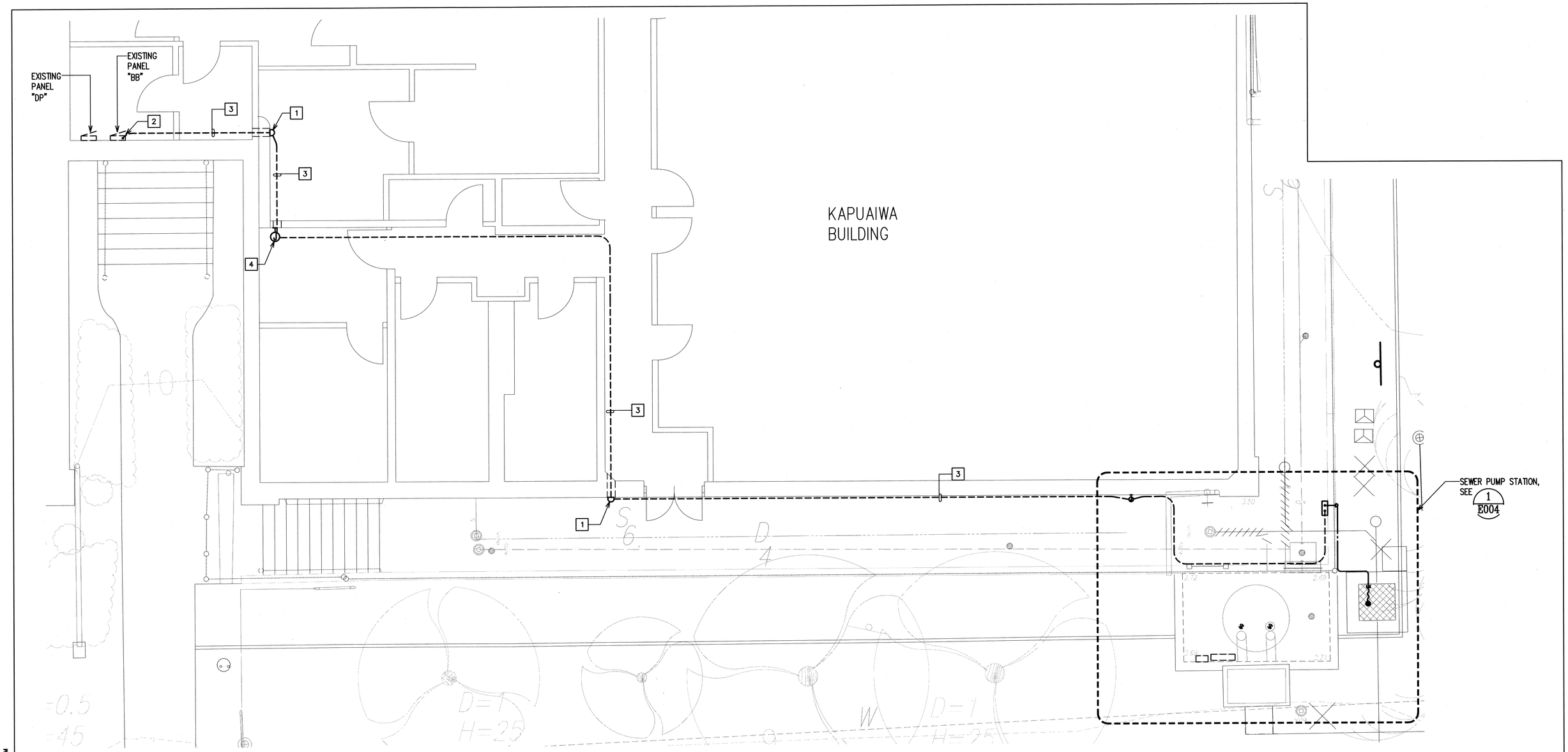

1 ELECTRICAL SITE PLAN
E003 SCALE: 1/4"=1'-0"

NOTES:

1. CONDUIT BODY; HEIGHT AS REQUIRED. DRILL AND PATCH EXISTING WALL FOR CONDUIT PENETRATION; PAINT TO MATCH EXISTING ADJACENT FINISH.
2. STUB INTO EXISTING PANEL "BB" FOR NEW CONNECTION TO SEWER PUMP STATION.
3. PROVIDE 3/4"C WITH 2#6, 1#6 GND. PROVIDE 316 STAINLESS STEEL CONDUIT SUPPORTS ALONG ROUTE BACK TO PANEL "BB".
4. NEW WALL MOUNTED JUNCTION BOX. DRILL AND PATCH EXISTING WAL FOR CONDUIT PENETRATION; PAINT TO MATCH EXISTING ADJACENT FINISH.

4' 2' 0 4' 8' 12'
SCALE: 1/4"=1'-0"
GRAPHIC SCALE

REVISION NO.	SYM.	DESCRIPTION	SHT. OF	DATE	APPROVED: ADMINISTRATIVE DIRECTOR OF COURTS

BILLY J. ORNELLAS
LICENSED PROFESSIONAL ENGINEER
No. 11658-E
HAWAII, U.S.A.
EXPIRES: 4/30/20
THIS WORK WAS PREPARED BY ME OR UNDER MY SUPERVISION AND CONSTRUCTION OF THIS PROJECT WILL BE UNDER MY OBSERVATION
SIGNATURE

THE JUDICIARY
STATE OF HAWAI'I

KAPUAIWA BUILDING
SEPARATE STORM DRAIN AND BASEMENT
SANITARY SEWER SYSTEMS
HONOLULU, OAHU, HAWAII

ELECTRICAL SITE PLAN

DESIGNED BY: YS	CHECKED BY: BJO	JUDICIARY PROJECT NO. 1718-07-014	DRAWING NO. E003
DRAWN BY: YS	APPROVED BY: BJO	DATE JAN 2020	SHEET 21 OF 24 SHTS
SCALE: AS SHOWN			

FILE _____ DRAWER _____ FOLDER _____

Z:\CAD\PROJECTS\218103\E003-218103-ELECTRICAL SITE PLAN.DWG 1/10/2020 1:54 PM

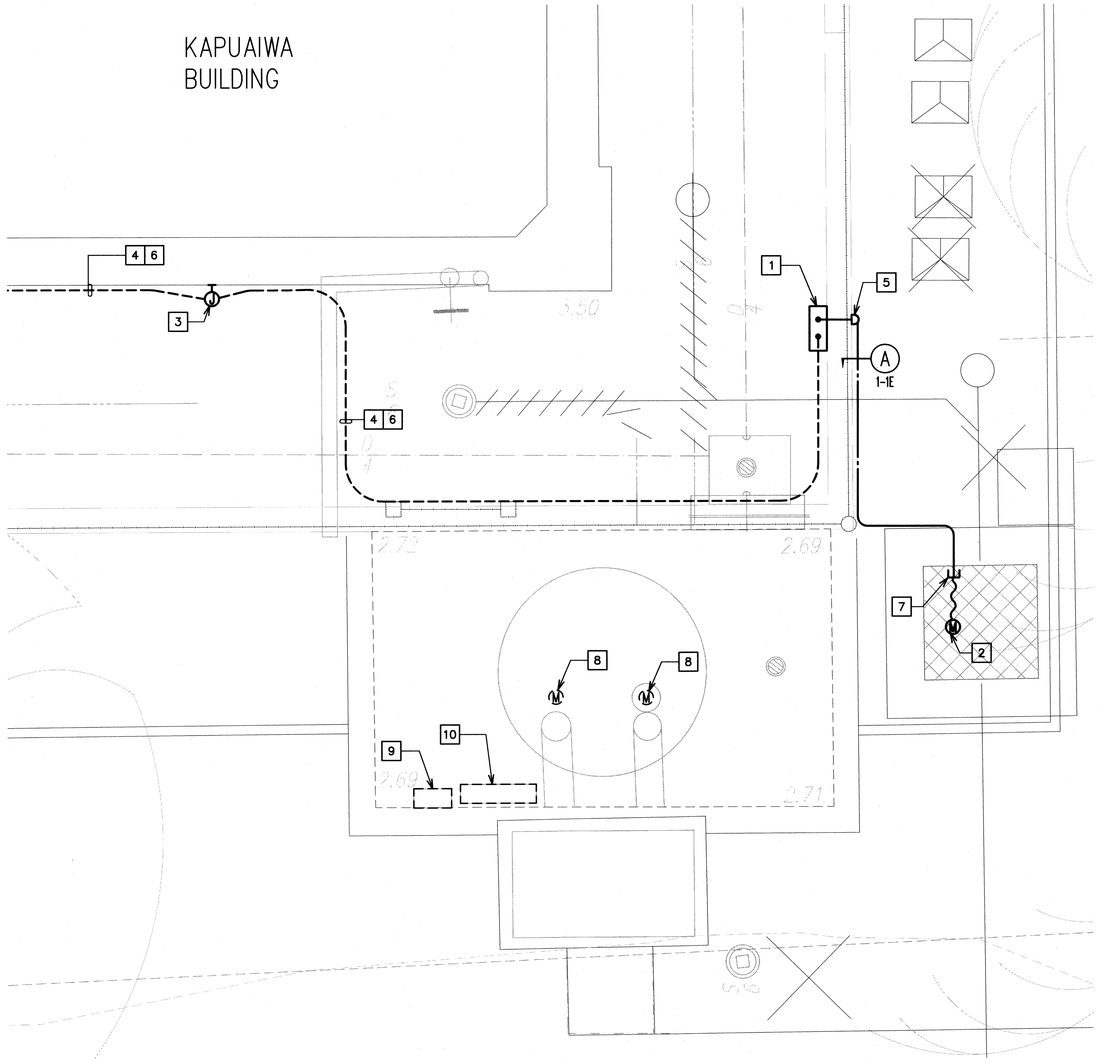

1 / E004 PUMP STATION ELECTRICAL PLAN

SCALE: 1/2"=1'-0"

NORTH

NOTES:

1. NEW SEWER PUMP STATION CONTROL PANEL. SEE ELEVATION ON SHEET 1/E006.
2. NEW SEWER PUMP STATION MOTOR CONNECTIONS.
3. NEW 6"H X 4"W X 4"D NEMA 4XSS JUNCTION BOX
4. PROVIDE 3/4"C WITH 2#6, 1#6 GND. PROVIDE 316 STAINLESS STEEL CONDUIT SUPPORTS ALONG ROUTE BACK TO PANEL BB.
5. NEW CONDUIT BODY; HEIGHT AS REQUIRED.
6. ROUTE NEW SEWER PUMP STATION CONTROL PANEL CONDUIT ALONG ROUTE OF EXISTING STORM WATER PUMP CONDUITS LEADING INTO THE KAPUAIWA BUILDING.
7. PROVIDE CONDUIT SEAL FITTING WITH APPROVED SEALING COMPOUND WHEN ENTERING WET WELL CLASS I, DIVISION I, PER NEC 501.15.
8. EXISTING STORM WATER PUMP TO REMAIN.
9. EXISTING JUNCTION BOX TO REMAIN.
10. EXISTING PUMP CONTROL PANEL TO REMAIN.

2' 1' 0 2' 4' 6'

SCALE: 1/2"=1'-0"

GRAPHIC SCALE

REVISION NO.	SYM.	DESCRIPTION	INIT. OF	DATE	APPROVED: ADMINISTRATIVE DIRECTOR OF COURTS

BILLY J. ORNELLAS
LICENSED PROFESSIONAL ENGINEER
No. 11658-E
HAWAII, U.S.A.

EXPIRES: 4/30/20

THIS WORK WAS PREPARED BY ME OR UNDER MY SUPERVISION AND CONSTRUCTION OF THIS PROJECT WILL BE UNDER MY OBSERVATION

SIGNATURE

THE JUDICIARY
STATE OF HAWAI'I

KAPUAIWA BUILDING
SEPARATE STORM DRAIN AND BASEMENT
SANITARY SEWER SYSTEMS
HONOLULU, OAHU, HAWAII

PUMP STATION ELECTRICAL PLAN

DESIGNED BY: YS	CHECKED BY: BJO	JUDICIARY PROJECT NO. 1718-07-014	DRAWING NO. E004
DRAWN BY: YS	APPROVED BY: BJO	DATE JAN 2020	SHEET 22 OF 24 SHTS
SCALE: AS SHOWN			

FILE ____ DRAWER ____ FOLDER ____

Z:\ACAD\PROJECTS\218103\E004-218103-PUMP ELECTRICAL PLAN.DWG 1/10/2020 1:54 PM

EXIST PANEL "BB"

100 A MAIN LUGS ONLY
240 / 120 VOLTS, 1-PHASE, 3-WIRE
10,000 A.I.C. PLUG-IN TYPE,
WALL MOUNTED

CKT. NO.	USE: L-LTS, R-RECEP, PFB-PROVISION FUTURE BKR., S-SPARE, F-FAN, W-WARMER	BREAKER POLE	BREAKER AMPS	WIRE SIZE	KVA ON BUSSES L1		KVA ON BUSSES L2		WIRE SIZE	BREAKER POLE	BREAKER AMPS	USE: L-LTS, R-RECEP, PFB-PROVISION FUTURE BKR., S-SPARE, F-FAN, W-WARMER	CKT. NO.
1	R-JANITORS CLOSET (*)	1	20	12	0.4	1.0			12	1	20	RM 117, ROOF GFCI (*)	2
3	SPARE (*)	1	20				1.0	1.0	12	1	20	CHILLER CONTROL (*)	4
5	SPARE (*)	1	20		1.0	1.0			12	1	20	RM 101, 102, 103 (*)	6
7	L-BASEMENT (*)	1	20	12			1.0	1.0		1	20	SPARE (*)	8
9	SEWER PUMP (**)	2	40	8	1.9	1.0				1	20	SPARE (*)	10
11	-						1.9	1.0	12	1	20	DRINKING FOUNTAIN (*)	12
13	SPARE (*)	1	20		1.0	1.0				1	20	SPARE (*)	14
15	L, R-1ST FLOOR ENTRY (*)	1	20	12			1.0	1.0		1	20	SPARE (*)	16
	CONNECTED LOAD PER PHASE					8.3		8.9					
	DEMAND LOAD PER PHASE					8.3		8.9					

(*) DENOTES EXISTING LOAD ON EXISTING CIRCUIT BREAKER
(**) DENOTES NEW LOAD ON NEW CIRCUIT BREAKER

TOTAL CONNECTED LOAD (KVA)	17.2
DEMAND FACTOR	100%
TOTAL DEMAND LOAD (KVA)	17.2
HIGH LEG (AMPS)	74.2

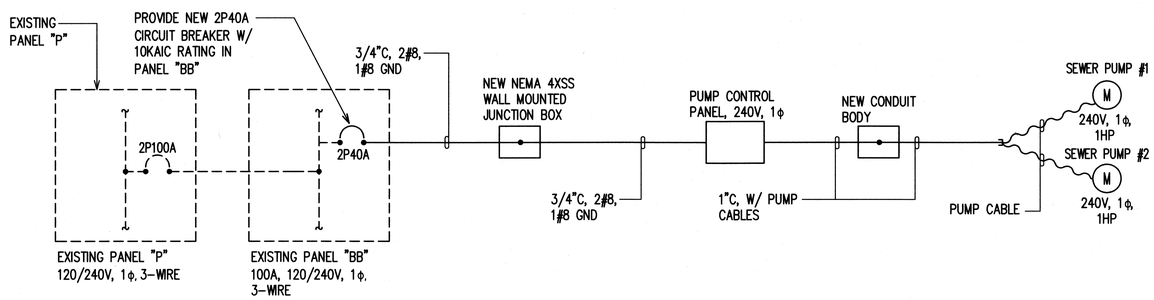

ONE-LINE DIAGRAM

REVISION NO.	SYM.	DESCRIPTION	SHT. OF	DATE	APPROVED: ADMINISTRATIVE DIRECTOR OF COURTS

BILLY J. ORNELLAS
LICENSED PROFESSIONAL ENGINEER
No. 11658-E
HAWAII, U.S.A.

EXPIRES: 4/30/20

THIS WORK WAS PREPARED BY ME OR UNDER MY SUPERVISION AND CONSTRUCTION OF THIS PROJECT WILL BE UNDER MY OBSERVATION

SIGNATURE

THE JUDICIARY
STATE OF HAWAI'I

KAPUAIWA BUILDING
SEPARATE STORM DRAIN AND BASEMENT
SANITARY SEWER SYSTEMS
HONOLULU, OAHU, HAWAII

PANEL SCHEDULE AND ONE-LINE DIAGRAM

DESIGNED BY: YS	CHECKED BY: BJO	JUDICIARY PROJECT NO. 1718-07-014	DRAWING NO. E005
DRAWN BY: YS	APPROVED BY: BJO	DATE JAN 2020	SHEET 23 OF 24 SHTS
SCALE: AS SHOWN			

FILE ____ DRAWER ____ FOLDER ____

Z:\ACAD\PROJECTS\218103\E005-218103-PANEL SCHEDULE AND ONE-LINE DIAGRAM.DWG 1/10/2020 1:54 PM

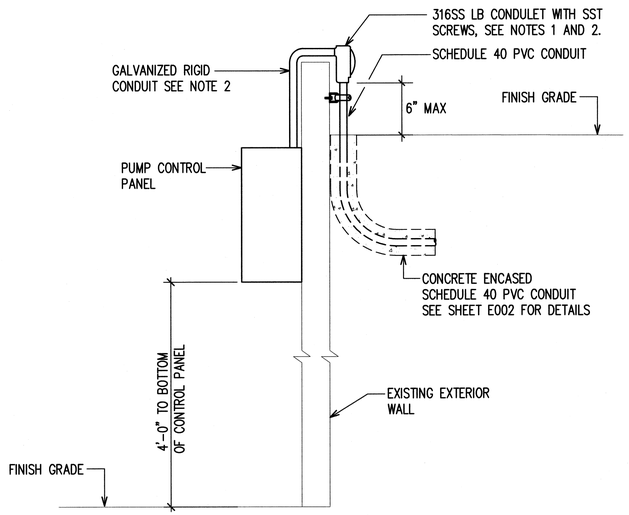

1 / E006 CONTROL PANEL AND CONDUIT BODY ELEVATION

NOT TO SCALE

NOTES:

1. SEAL INSIDE CONDUIT AFTER CONDUCTOR INSTALLATION.
2. APPLY CORROSION INHIBITOR ON JOINTS BETWEEN DISSIMILAR METALS.

REVISION NO.	SYM.	DESCRIPTION	SHT. OF	DATE	APPROVED: ADMINISTRATIVE DIRECTOR OF COURTS

BILLY J. ORNELLAS
LICENSED PROFESSIONAL ENGINEER
No. 11658-E
HAWAII, U.S.A.

EXPIRES: 4/30/20

THIS WORK WAS PREPARED BY ME OR UNDER MY SUPERVISION AND CONSTRUCTION OF THIS PROJECT WILL BE UNDER MY OBSERVATION

SIGNATURE

THE JUDICIARY
STATE OF HAWAI'I

KAPUAIWA BUILDING
SEPARATE STORM DRAIN AND BASEMENT SANITARY SEWER SYSTEMS
HONOLULU, OAHU, HAWAII

CONTROL PANEL AND CONDUIT BODY ELEVATION

DESIGNED BY: YS	CHECKED BY: BJO	JUDICIARY PROJECT NO. 1718-07-014	DRAWING NO. E006
DRAWN BY: YS	APPROVED BY: BJO	DATE JAN 2020	SHEET 24 OF 24 SHTS
SCALE: AS SHOWN			

FILE ____ DRAWER ____ FOLDER ____

Z:\ACAD\PROJECTS\218103\E006-218103-MISCELLANEOUS ELECTRICAL DETAILS.DWG 1/10/2020 1:49 PM