The Judiciary
State of Hawaii
Office of the Chief Court Administrator,
1st Circuit
777 Punchbowl Street
Honolulu, HI 96813
(808) 538-5991

Notice to Offerors

- Financial Services Department, Contracts & Purchased is not notified when a particular solicitation is viewed or downloaded. Therefore, Offerors interested in responding to this solicitation must first register their participation by completing and submitting this Registration Form.

- The completed Registration Form must be e-mailed to Deepa P. Sheehan as listed below as soon as possible after downloading this solicitation, but in any case, prior to the deadline for offers.

- Only Offerors who are registered will be forwarded addenda and/or other notices related to this solicitation when issued, if any. Failure to register may result in the Offeror not receiving addenda and/or other solicitation related notices, and such offers may therefore be rejected, and not considered for award.

- Failure of the Offeror to receive any such addenda shall not relieve the Offeror of any obligation under this solicitation. It remains the responsibility of the Offeror to complete and submit its offer in accordance with the instructions contained in this solicitation, as well as subsequent interpretations and addenda, if any.

Number:	RFP J19313
Title:	Design, Furnish, Install, and Maintain a Photovoltaic System with Battery Storage for the Ronald TY Moon Judiciary Complex in Kapolei
Deadline:	2:00 p.m. Hawaii Standard Time, May 2, 2019

Technical Questions:

Contact Person:	Dee Dee Letts
Contact's e-mail Address:	DeeDee.D.Letts@courts.hawaii.gov

All Other Questions:

Contact Person:	Deepa Sheehan
Contact's e-mail Address:	Deepa.P.Sheehan@courts.hawaii.gov

Offeror Information:

Name of Company Registering:	
Mailing Address:	
Name of Contact Person:	
Contact's e-mail Address:	
Contact's Telephone/ Facsimile No.:	

JUDICIARY – STATE OF HAWAII

OFFICE OF THE CHIEF COURT

ADMINISTRATOR, 1ST CIRCUIT

April 26, 2019

REQUEST FOR PROPOSAL

RFP J19313

SEALED PROPOSALS

DESIGN, FURNISH, INSTALL, AND MAINTAIN A PHOTOVOLTAIC SYSTEM WITH BATTERY STORAGE FOR THE RONALD TY MOON JUDICIARY COMPLEX IN KAPOLEI

will be received up to 12:00p.m.

on

June 14, 2019

The Judiciary, State of Hawaii
Financial Services Office
Kauikeaouli Hale (District Court Building)
1111 Alakea Street, 6th Floor
Honolulu, Hi 96813-2807

Site Inspection / Pre-Proposal Conference will be held on May 15, 2019 at 2:00 p.m. HST at the Ronald TY Moon Judiciary Complex; interested parties shall meet at the Staff Parking area at the southeast corner of the complex. Attendance is mandatory.

Questions relating to the technical aspects to this solicitation may be directed to Ms. DeeDee Letts via email at DeeDee.d.Letts@courts.hawaii.gov. If you have any questions regarding the administrative portion of the RFP, questions may be directed to Ms. Deepa P. Sheehan in the Contract & Purchasing Office at (808) 538-5805.

/s/ Rodney A. Maile

Rodney A. Maile
Administrative Director of the Courts

1.0 OVERVIEW OF PROCUREMENT PROCESS

1.1 RFP Organization

This RFP is organized as follows:

Section 1. Overview of Procurement Process. Provides Offerors with a general overview of the RFP process.

Section 2. Purpose and Overview. Provides Offerors with general information about the objectives of this project and RFP, and critical success factors.

Section 3. Scope of Work and Requirements. Provides Offerors with a general description of the tasks to be performed, delineates JUDICIARY and Contractor's responsibilities, stipulates Offeror qualifications, and defines deliverables.

Section 4. Proposal. Describes the required format and content for the Offeror's submittal, and establishes requirements for the Price Proposal.

Section 5. Proposal Evaluation. Describes how proposals will be evaluated by the JUDICIARY.

Appendix A. Standard Qualification Questionnaire for Offerors Form

Appendix B. Proposal Identification and Information Form

Appendix C. Wage Certificate

Appendix D. Contract Minimum and Special Conditions

Appendix E. Record Drawings for the Ronald TY Moon Judiciary Complex (for information only)

Appendix F. Locations for the Temporary Parking Area and for the Electrical Connection for the Photovoltaic System

Appendix G. State's General Conditions

1.2 Procurement Authority

This procurement is being conducted as a competitive sealed proposals procurement in accordance with the procedures set forth in §103D-303 of the Hawaii Revised Statutes (hereinafter "HRS") and Title 3, Subtitle 11, Chapter 122, Subchapter 6 of the Hawaii Administrative Rules (hereinafter "HAR"). The relevant provisions of §103D, HRS, and their associated HAR, are incorporated by reference and made a part of this RFP.

1.3 Judiciary Contract Lead

For purposes of this Contract, the following person is designated the Judiciary Contract Lead:

DeeDee Letts
email: deedee.d.letts@courts.hawaii.gov
Phone: (808) 538-5990
Fax: (808) 539-4402

Judiciary Contract Lead Office
Judiciary, State of Hawaii
First Circuit

1.4 Procurement Timetable

Except as noted, the following schedule represents the JUDICIARY's best estimate. All times indicated are Hawaii Standard Time (HST). If any component of this schedule is delayed, the rest of the schedule will likely be amended by the same number of days, however the JUDICIARY reserves the right to amend or revise the timetable without prior written notice when such revision or amendment is in the JUDICIARY's best interest.

Public Notice announcing Request for Proposal (RFP)	April 26, 2019
Standard Qualification Questionnaire Due at: The Judiciary, State of Hawaii Financial Services Office Kauikeaouli Hale (District Court Building) 1111 Alakea Street, 6th Floor Honolulu, Hi 96813-2807 **THERE ARE NO EXCEPTIONS TO THIS DUE DATE UNLESS THE DATE IS AMENDED IN WRITING BY THE PROCUREMENT AND CONTRACTS BRANCH**	12:00 p.m. HST, May 8, 2019
Notice to all offerors as to which offerors have been short-listed	May 9, 2019
Site Inspection / Pre-Proposal Conference	2:00 p.m. HST, May 15, 2019
Deadline for submission of written questions	On or before 4:00 p.m., May 23, 2019
JUDICIARY's responses to written questions	May 30, 2019
Proposals due at: The Judiciary, State of Hawaii Financial Services Office Kauikeaouli Hale (District Court Building) 1111 Alakea Street, 6th Floor Honolulu, Hi 96813-2807 **THERE ARE NO EXCEPTIONS TO THIS PROPOSAL DUE DATE UNLESS THE DATE IS AMENDED IN WRITING BY THE PROCUREMENT AND CONTRACTS BRANCH.**	12:00 p.m HST, June 14, 2019
Evaluation of Proposals	June, 2019
Contractor(s) Selected	June, 2019
Contract Award	June, 2019
Contract Commencement Date/Notice to Proceed	On or about July 30, 2019

1.5 Standard Qualification Questionnaire For Offerors

This Request for Proposal (RFP) is issued to prequalify offerors to select a short list of no more than three (3) responsible offerors, prior to the submittal of proposals. The Standard Qualification Questionnaire form due date is indicated in Section 1.4. Notice will be given to all offerors as to which offerors have been short-listed as indicated in Section 1.4. Offerors who have been included on the short list shall be the only Offerors whom may submit a proposal in response to this RFP.

1.6 Cancellation of RFP; Rejection of Proposals

This RFP may be Cancelled and any or all proposals may be rejected in whole or in part, when it is determined to be in the best interest of the Judiciary.

1.7 Required Review/Written Questions

It is the Offeror's responsibility to carefully review this solicitation for defects and questionable or objectionable matter. Solicitation documents include this RFP, any attachments, plans referred to herein, and any other relevant documentation.

Comments concerning defects, discrepancies, omissions, questionable or objectionable matter, or questions related to this RFP must be made in writing to allow issuance of any necessary amendments to the RFP. It will also help prevent exposure of Offeror's proposal prepared in response to a defective or inaccurate solicitation upon which award could not be made.

Comments related to this solicitation shall be communicated in writing to the appropriate RFP contact person identified, in the Notice to Offerors via e-mail by the date and time established for submission of written questions to ensure an official response. The JUDICIARY will not respond to oral or informal questions.

Such comments shall contain pertinent information to identify the prospective Offeror, its telephone number, e-mail address, the RFP number, as well as reference to the specific page, section, and/or paragraph as applicable.

The response to the prospective Offerors' written questions received by the scheduled date indicated in section 1.4, shall omit reference to the source(s) of the questions, shall be issued as an addendum to the RFP, and shall become a part of the RFP. The JUDICIARY will publish the questions as they are submitted including any background information provided with the question. The JUDICIARY at its sole discretion may omit questions which may be combined or paraphrase questions and background content for clarity.

The JUDICIARY's responses shall be communicated in writing via published addenda to this RFP. Offerors who have submitted an RFP Registration Form will receive notification of any addenda from the date the Registration Form is received. The JUDICIARY is not responsible for delays or non-receipt of such responses or any communications by the prospective Offerors.

If an Offeror submits a question after the scheduled date, the JUDICIARY may answer the question but does not guarantee that the answer will be provided prior to the Proposal due date.

1.8 RFP Addenda

The JUDICIARY reserves the right to amend this RFP at any time prior to the closing date of the RFP. All addenda issued shall be incorporated into the resulting contract. Failure of any Offeror to complete and submit an RFP Registration Form or receive any such addenda or interpretations shall not relieve the Offeror of any obligation under this solicitation.

1.9 Notice of Intent to Offer (Letter of Intent)

A notice of intent to submit a Proposal is NOT required.

1.10 Site Inspection / Pre-Proposal Conference

A Site Inspection / Pre-Proposal Conference will be held on May 15, 2019 at 2:00 p.m. HST at the Ronald TY Moon Judiciary Complex; interested parties shall meet at the Staff Parking area on the southeast corner of the facility. Attendance is mandatory.

Submission of a proposal shall be evidence that the Offeror understands the scope of the project and shall comply with all requirements stated herein, if awarded the contract. No additional compensation, subsequent to proposal opening, shall be allowed by reason of any misunderstanding or error regarding site conditions or work to be performed.

1.11 Deadline for Proposals

Proposals shall be received only until the hour and date set for the due date indicated in section 1.4. Proposals received after the deadline shall be rejected and returned unopened. Timely receipt of offers shall be evidenced by the date and time registered by Financial Services Department time stamp clock.

1.12 Proposal Opening

Proposals shall not be opened publicly, but shall be opened in the presence of two or more procurement officials. The register of proposals and Offerors' proposals shall be open to public inspection upon posting of the award.

1.13 Disqualification of Offers

The JUDICIARY reserves the right to consider as acceptable only those proposals submitted in compliance with all the requirements set forth in this RFP and which demonstrate an understanding of the issues involved and the scope of work.

An Offeror shall be disqualified, and the Offeror's Proposal shall be rejected for any one or more of the following non-exclusive reasons as solely determined by the JUDICIARY:

1.13.1 Proposal received after specified deadline.

1.13.2 Proposal is deemed incomplete or lacking in key requirements or forms.

1.13.3 A Proposal with conditional proposals including but not limited to a Proposal which includes any other set of terms and conditions, or any terms or conditions contradictory to those included in this RFP.

1.13.4 A Proposal signed by other than an authorized individual, or a Proposal not containing an original signature in ink.

1.13.5 A faxed or electronically submitted proposal will not be accepted or acknowledged.

1.13.6 More than one Proposal from an individual, firm, corporation or joint venture under the same or different names (Offeror), whereby all proposals from the Offeror shall be rejected.

1.13.7 Evidence to the JUDICIARY's sole satisfaction of collusion among Offerors, lack of responsibility and cooperation to JUDICIARY requests during the RFP process or as shown by past work, being in arrears on existing contracts with the State of Hawaii, or defaulting on previous contract(s).

1.13.8 Failure to possess proper licenses, facilities, equipment or sufficient experience to provide the proposed solution or to perform the work contemplated.

1.13.9 Evidence of any noncompliance with any applicable law or rule.

1.14 Proposal Evaluation

The JUDICIARY will conduct a comprehensive, fair, and impartial evaluation of the proposals it receives in response to this RFP. Refer to Section 5 of this RFP for specific requirements and details of the process.

1.15 Proposal as Part of the Contract

This RFP and part or all of the successful proposal may be incorporated into the contract.

1.16 Additional Terms and Conditions

The JUDICIARY reserves the right to add terms and conditions during contract negotiations, if any. These terms and conditions will be within the scope of the RFP and will not affect the proposal evaluations.

1.17 Offer Acceptance Period

The JUDICIARY's acceptance of a proposal, if any, will typically be made within ninety (90) Calendar days after the opening of proposals. Prices quoted by the Offeror shall therefore remain firm for ninety **(90) Calendar days from the receipt of proposals.**

1.18 Contract; Contract and Performance Period

The CONTRACTOR receiving the award shall be required to enter into a formal written contract. Upon execution of contract, the JUDICIARY will issue a notice to proceed and a fully executed copy of the contract to the CONTRACTOR. No work will be undertaken by the CONTRACTOR prior to the commencement date specified on the contract as the JUDICIARY is not liable for any work, contract costs, expenses, loss of profits, or any damages whatsoever incurred by the Contractor prior to official starting date.

1.18.1 Contract Term

The Contract Term shall commence upon full execution of the contract and the issuance of the Notice to Proceed (NTP) (on or about July 30, 2019) and shall end 365 calendar days after issuance of the NTP.

1.18.2 Performance Period

The CONTRACTOR shall complete the work within the time limits specified herein. The time specified herein is the maximum time allowed.

1.19 Contract Award

Award, if any, shall be made to the responsible Offeror with the highest number of points and whose proposal the JUDICIARY deems most advantageous in accordance with the evaluation criteria specified.

1.20 Responsibility of Offerors; Hawaii Compliance Express

The Offeror is advised that if awarded a contract under this RFP, offeror shall, upon award of contract, furnish proof of compliance with the requirements of HRS §103D-310 and HAR § 3-122-112 including:

- Chapter 237, General Excise Tax Law;
- Chapter 383, Hawaii Employment Security Law;
- Chapter 386, Workers' Compensation Law;
- Chapter 392, Temporary Disability Insurance;
- Chapter 393, Prepaid Health Care Act; and

- One of the following:
    1. Be registered and incorporated or organized under the laws of the State of Hawaii (hereinafter referred to as a “Hawaii business”); or

    2. Be registered to do business in the State of Hawaii (hereinafter referred to as a “compliant non-Hawaii business”).

Offeror may demonstrate proof of compliance with the above-referenced requirements by submitting a *Certificate of Vendor Compliance* issued by the Hawaii Compliance Express (HCE) online system to the JUDICIARY, Contracts and Purchasing Branch upon award of a contract. The HCE service allows vendors to register online through a simple wizard interface at http://vendors.ehawaii.gov. The *Certificate of Vendor Compliance* provides current compliance status as of the issuance date, satisfies requirements of Chapter 103D-310(c), HRS, and is therefore acceptable for contracting purposes. Contractors that elect to use HCE services are required to pay an annual fee to the Hawaii Information Consortium, LLC (HIC).

Due to the time required to obtain the HCE *Certificate of Vendor Compliance*, it is highly recommended that the interested Offeror begin the registration process immediately.

1.21 Failure to Execute Contract; Timely Submission of Certificates

At time of contract award, the above *Certificate of Vendor Compliance* and any other documentation and certification shall be submitted to the JUDICIARY, Procurement and Contracts Branch as soon as possible or by the deadline established by JUDICIARY. If a valid certificate or compliance documentation is not submitted on a timely basis for award of a contract, award made to an Offeror otherwise responsible may be annulled.

Failure to execute a contract as required within ten (10) Calendar days or such further time as the JUDICIARY may allow after the Awardee has received the contract for execution shall be just cause for the annulment of the award. JUDICIARY may award the contract to the next responsible Offeror or may call for other offers, whichever is deemed to be in the best interest of the JUDICIARY.

1.22 Notification of Award; Non-selected Offeror(s)

Upon award to the successful Offeror(s), the JUDICIARY shall post publicly, a notice of award which may be viewed on the Judiciary Website.

1.23 Protest

Pursuant to §103D-701, HRS and §3-126, HAR, a protest of the solicitation must be made prior to proposal opening, and a protest of an award or proposed award shall be submitted within five (5) working days after the posting of award of the contract or within five (5) working days following a debriefing. The notice of award(s) resulting from this solicitation shall be posted on the Hawaii Awards and Noticed Data System (HANDS) website at https://www.courts.state.hi.us/fiscal/awards.

Any protest pursuant to §103D-701, HRS and §3-126, HAR shall be submitted in writing to the JUDICIARY’s Administrative Director of Courts, Rodney Maile, 417 South King St. Honolulu, HI 96813

1.23 Requirements for Performance and Payment Bonds

Pursuant to HAR 3-122-224, before any contract can be entered into, the CONTRACTOR shall provide performance and payment bonds to the State. The performance and payment bonds shall be in the penal sum of hundred percent (100%) of the amount of the contract awarded.

RFP PURPOSE AND OVERVIEW

2.0 Purpose and Introduction

The purpose of this RFP is to provide a photovoltaic storage system, including battery storage, that is capable of both 1) providing as close to 100% as possible of the current daily electrical consumption for the Juvenile Detention Facility (JDF) and 2) provide an alternative source of power for the JDF when HECO supplied power is unavailable.

The Judiciary understands that Photovoltaic ("PV") systems can be designed in many different ways. The Judiciary must therefore measure the benefits against the costs. This RFP will allow the Judiciary to evaluate the proposed solutions and related costs and to select the system providing the best value for the Judiciary.

Work included under this RFP includes the design and installation of a Photovoltaic System with Battery Storage.

Budget for the project is two million ($2,000,000.) to two million three hundred thousand ($2,300,000.)

At a minimum, the Judiciary desires a system comprised of the following:

- A PV system, in place complete, located over the Staff Parking area that will generate a minimum capacity of 400 KW. Should the designed system not cover the entire employee parking area due to funding constraints the system must be designed so that the remaining area can be covered in the future when funding is available without having to change the initial system.
- A structural support system that will support the PV system, including lighting that will allow the existing parking lot lighting to be abandoned if necessary. If the system proposed does not cover all of the available area, the structural support system should be designed to either be easily expanded to cover all of the available area or the structural support system for any potential future expansion of the PV panels should be installed with the initial system, to minimize future costs and construction impacts.
- Installation shall not decrease the number of parking stalls available at the end of the installation.
- A Battery storage system, in place complete, including facilities to house the battery storage system, designed to provide enough electricity to power the Juvenile Detention Facility ("JDF") for a minimum of 24 hours, which is approximately an average of 1,800 KWh per day. The location of the battery storage facilities will be determined in consultation with the successful bidder.
- A control and monitoring system that can be accessed remotely via the internet.

The Judiciary desires a vendor who has the products, capability, and personnel necessary to undertake this project, who can provide a sound roadmap for future upgrades and who can articulate commitment to the product innovation and to the support of emerging standards.

The Judiciary intends to have full ownership of the installed system.

3. SCOPE OF WORK; PROJECT AND OFFEROR REQUIREMENTS

3.1 PHOTOVOLTIAC AND BATTERY SYSTEM REQUIREMENTS

The Judiciary desires a system comprised of the following components:

1) A PV system capable of generating a minimum of 400 KW.
2) A battery system capable of powering the JDF for a minimum of 24 hours.
3) The vendor must submit a detailed design proposal to maximize the use of the entire system.
4) The vendor must provide maintenance during the warranty period and be able to enter into a maintenance schedule with the Judiciary should the Judiciary want.
5) A system whose structural design allows for additional panels to be added in the future without redoing the existing structural system.

The Specifications listed below are minimum design requirements.

1) Photovoltaic Modules
   - SunPower panels or approved equivalent
   - High efficiency (minimum 21% efficiency), monocrystalline modules
   - Tempered glass low reflectance panel with marine grade salt/corrosion resistant construction.
   - Listed on the California Energy Commission's PTC list. Canadian Solar, LDK Solar or approved equal
   - 25-year minimum power production and 25 year product warranties from the manufacturer
   - Warranted maximum 0.25% per year degradation rate

2) Inverters
   - 90% minimum CEC efficiency rating.
   - Enclosures shall be NEMA 4 stainless steel
   - Minimum manufacturer's warranty of 20 years.

3) Batteries
   - Tesla Powerpack 2 or approved equal
   - Minimum 20-yr manufacturer's warranty

4) Monitoring System
   - Manufacturer approval for monitoring of system components

5) Workmanship warranty of five (5) years shall be included.

3.2 SYSTEM INSTALLATION

All work performed during normal business hours must not interfere with the facilities operations. The regular working hours for this project are from 7:45 a.m. to 4:30 p.m., Monday through Friday, excluding State Holidays.

The CONTRACTOR shall phase the installation to temporarily eliminate the fewest number of parking stalls at any given time during the installation work. The CONTRACTOR shall provide a temporary parking area that is capable of providing parking equal to or more than the number of permanent stalls eliminated. The CONTRACTOR shall be responsible for making the temporary parking area useable for parking private cars, which may include clearing and grubbing, grading, adequate signage and parking stall delineation, dust control and associated maintenance.

The CONTRACTOR shall hire sheriffs to oversee any work they will be performing inside a Judiciary

owned building. Sheriffs are not required for work in the parking area. Sheriffs are required to be on site with the CONTRACTOR when performing any work in a building. Arrangements for Sheriffs are made by calling Sherriff Kurt Enos at (808) 587-3663 or Cell (808) 285-6001 or email at kurtland.d.enos@hawaii.gov. Special duty officer charges are $30 an hour or any fraction thereof (minimum of quarter hour increments), a minimum of 4 hours is required unless approved beforehand.

The PV system shall be installed in a professional manner conforming to existing building codes, City and County of Honolulu Fire Code Regulations, and in accordance with the manufacturer's installation specifications.

After the installation of the system, the CONTRACTOR shall conduct a test of the complete system, sending signals to the central monitoring station to confirm proper operation of the system. Testing ll be conducted in the presence of the Judiciary's designee.The CONTRACTOR shall provide operating manuals, telephone assistance for connection purposes, and on-site training as necessary for the authorized personnel.

3.3 QUALITY OF EQUIPMENT

All equipment, materials, and supplies furnished under this project shall be new and currently in manufacture, in perfect condition, designed specifically to perform its intended service and function, shall have warranties applicable to new products, and shall meet or exceed industry standards. It shall be free from defects that may render it unfit to use. Damaged or rejected items must be immediately removed from the site and replaced with items of the specified quality.

All system components offered shall be currently in production and shall meet all applicable federal, state and local electrical, fire, safety codes and other applicable laws, regulations and codes. Equipment shall contain only manufacturer's factory approved parts to maintain all manufacturer's warranties. All hardware and software provided shall be manufactured to meet the latest version of applicable standards for their use. Damaged or rejected products must be immediately removed from the site and replaced with products of the quality required by these specifications.

Failure to replace or to remove any rejected product shall not relieve the CONTRACTOR from the responsibility imposed upon it by the contract.

The Judiciary may, at any time and by written order, stop the delivery of products not conforming to these specifications. Such stop order shall not relieve the Contractor of its obligation to complete its work within the contract time limits, nor shall it in any way terminate, cancel, or abrogate the contract or any part thereof.

3.4 TRAINING

CONTRACTOR shall provide comprehensive training for Judiciary staff. Training shall be in-person and shall include, but is not limited to: usage of the system, monitoring the system, updating user information, and troubleshooting equipment.

If requested by Judiciary staff, CONTRACTOR shall furnish one hardcopy and/or one electronic document of any training materials, Support Manuals, and/or Quick Reference Sheets within five (5) business days of JUDICIARY request.

3.5 MAINTENANCE SERVICE

Maintenance services shall be available through the contractor at the end of the warranty period should the JUDICIARY decide to enter into a maintenance contract. These services shall include on-site annual maintenance service and bi-annual cleaning to maintain the equipment in good operational condition. The CONTRACTOR shall contact the Judiciary at least twenty-four (24) hours in advance to

schedule maintenance.

Maintenance service and repair shall be performed by the CONTRACTOR's qualified service personnel during the Judiciary's normal operating hours, Monday through Friday. The CONTRACTOR shall have a service center located within the State of Hawaii and shall stock appropriate spare parts to respond to and remedy any malfunctions within twenty-four (24) hours.

3.6 OFFEROR QUALIFICATIONS

The purpose of the Offeror Qualifications section is to provide the JUDICIARY the ability to verify the experience and knowledge claims made in the proposal by the Offeror and to assess the Offeror's prior record in providing services to other organizations.

Failure on the Offeror's part to meet the requirements herein may result in a determination of non-responsiveness and subsequent disqualification of Proposal. These requirements shall remain in effect throughout the entire contact period. Failure to maintain these requirements may result in cancellation of **award or early, partial, or termination of a contract.**

At the time of proposing and during the contract period, Offeror must meet the following minimum qualifications.

Substantiating information or documentation shall be provided in offeror's proposal (Refer to RFP Section 4).

3.6.1 **Authorized Dealer or Distributor.** At the time of submission of proposal and throughout the contract period, Offeror shall be a manufacturer-authorized distributor or reseller of PV systems offered.

3.6.2 **Office Location.** Offeror shall have a permanent, Hawaii-based facility from where business is conducted and from where company representatives are accessible to telephone calls for complaints or requests that require immediate attention. An answering service is not acceptable.

3.6.3 **Experience.** Possess at least three (3) years of previous experience providing similar services to include the ability to design, furnish, install, and maintain offered PV systems.

3.6.4 **Install and Maintain.** Offeror shall have the ability to install and maintain equipment offered.

3.6.5 **Installer/Installation Service Provider.** Offeror shall have at least two (2) manufacturer-trained and, if applicable, certified installers or installation service provider's possessing installation experience. If Offeror does not have installation CApabilities, Offeror shall arrange with a third-party provider with a trained installer.

3.6.6 **Point-of-Contact.** Offeror shall designate at least one (1) employee as the JUDICIARY liaison and primary point-of-contact for this contract. This individual shall be based in the State of Hawaii and shall be capable of answering questions.

3.6.7 **Permits, Licenses, Certifications.** Offeror shall possess a valid General Contractor "A" license and specialty licenses C-13 and C-60. Licenses shall be current at the time of submittal and throughout the contract period. Offeror shall include all license numbers with their proposal.

Offerors proposal shall provide satisfactory evidence of his ability to perform under this contract, if awarded. The proposal shall include a description and detailed information about the PV system Offeror is proposing

for the Judiciary.

4. PROPOSAL

4.1 General Requirements

4.1.1 Any and all costs incurred by an Offeror in preparing and submitting a Proposal and conducting discussions, if any, shall be at the Offeror's sole expense and are the Offeror's sole responsibility. This includes the cost of any visits to client references, and JUDICIARY locations by an Offeror, but does not include any costs incurred by the JUDICIARY or its representatives for Offeror demonstrations or site visits.

4.1.2 Before submitting a proposal, each Offeror must examine the solicitation documents thoroughly. Solicitation documents include this RFP, any attachments, and any other relevant documentation.

4.1.3 Offerors are charged with presumptive knowledge of all requirements of all cited authorities. Offeror must become familiar with state, local, and federal laws, ordinances, rules, and regulations that may in any manner affect cost, progress, or performance of the work before submitting a proposal. Submission of a valid executed proposal by any prospective Offeror shall constitute admission of knowledge on the part of such Offeror.

4.1.4 The Scope of Work, Minimum Contract Provisions, General Conditions and other documents referenced in or attached to the proposal shall be considered a part of the proposal submitted, whether or not attached to the proposal at the time of submission. Such documents shall not be altered in any way; any alterations so made by the Offeror may result in rejection of the proposal.

4.1.5 Submission of a proposal shall constitute an incontrovertible representation by the Offeror of understanding, acceptance, and compliance with every requirement of this RFP, and that the RFP documents are sufficient in scope and detail to indicate and convey reasonable understanding of all terms and conditions of performance of the work.

4.1.6 Any proposal may be withdrawn at any time prior to but not after the hour fixed by public notice as the deadline for receipt of offers, provided that a request in writing, executed by the Offeror or the duly authorized representative, and is filed with the Financial Services Department, Contracts & Purchasing Branch. The withdrawal of a proposal shall not prejudice the right of an Offeror to submit a new proposal, but any such new proposal must still be received before the stated deadline.

4.1.7 A proposal that contains any omission, erasure, addition not called for, conditional offer or irregularity of any kind may be rejected. Corrections, if necessary, shall be made by lining out the materials to be corrected and by inserting the correction as close to the line-out as possible. Every such correction must be initialed by authorized individual signing the Proposal Identification and Information Form.

4.2 Confidential Information in Proposal

The contents of any proposal shall not be disclosed during the review, evaluation, or discussion process. Once the notice of the award is posted, all proposals (both successful and unsuccessful) become available for public inspection.

If an Offeror believes that any portion of the proposal contains information that should be withheld as confidential, then the Financial Services Department, Contracts & Purchasing Branch should be so advised in writing. Offeror shall request in writing nondisclosure of designated trade secrets or other proprietary data to be confidential. Such data shall accompany the Proposal, be clearly marked, and shall be readily separable from the Proposal in order to facilitate eventual public inspection of the non-confidential portion of the Proposal.

Whether those parts shall remain confidential will be determined under § 3-122-58(b), HAR and Chapter 92F, HRS. Pursuant to Section 3-122-58, HAR, if a person requests to inspect the portions of a proposal designated as confidential, the head of the purchasing agency or designee shall consult with the Judiciary's Staff Attorney and make a written determination in accordance with Chapter 92F, Hawaii Revised Statutes (HRS). If the request for confidentiality is denied, such information shall be disclosed as public information, unless the person appeals the denial to the Office of Information Practices in accordance with Section 92F-42(12), HRS.

4.3 Proposal Preparation

One of the objectives of this RFP is to make proposal preparation easy and efficient, giving offerors ample opportunity to highlight their proposals. The evaluation process must also be manageable and effective. When an offeror submits a proposal, it shall be considered a complete plan for accomplishing the tasks described in this RFP and any supplemental tasks the offeror has identified as necessary to successfully meet the obligations outlined in this RFP.

The proposal shall describe in detail the offeror's ability and availability of services to meet the primary project goal of this RFP as stated herein. Proposals shall be prepared in a straightforward and concise manner, in a format that is reasonably consistent and appropriate to the purpose of this RFP. Emphasis shall be on completeness and clarity of content. If any additional information is required by the JUDICIARY regarding any aspect of an offeror's proposal, such information shall be provided within two (2) business days of the JUDICIARY's request unless otherwise stated or directed by JUDICIARY.

4.4 Proposal Security

A Bond is required if submitting a Proposal.

4.5 Proposal Submission and Format

This section prescribes the standard format for a proposal submitted in response to this RFP.

Offeror shall submit a Proposal using the exact forms or reproductions of such forms as provided and as otherwise instructed by this RFP. Failure to comply may result in a determination that the proposal is non-responsive.

The standard format will facilitate the JUDICIARY's review, comparison, evaluation of proposals, and verification as to whether the minimum requirements are met by each Offeror and the Offeror's Proposal. The format is not intended to limit the content of a proposal in any way. The offeror may include any additional data or information that is deemed pertinent to this RFP.

Unless otherwise noted, proposal shall be submitted as follows:

4.5.1 Copies. Offeror shall submit one (1) original and three (3) hard copies.

4.5.2 Offeror shall submit the signed proposal in a sealed envelope, package or container, together with the required offer security, if any. The envelope, package or container shall be clearly identified with the RFP number and the name and address of the Offeror.

4.6 Proposal Organization and Content

Sections of the proposal shall be separated using index dividers. Proposals shall be organized in this order:

Table of Contents: The table of contents shall clearly identify the material by section and by page number.
Section 1: Proposal Identification and Information Form (See Appendix)

Section 2:	Executive Summary
Section 3:	Offeror Qualifications
	Subsection 3a: Offeror History and Background
	Subsection 3c: Project History List
	Subsection 3d: Project Team Organization
Section 4:	Proposed Solution including Technical Proposal and Timeline of Installation
	Subsection 4a: Proposed Solution / Technical Proposal
	Subsection 4b: Timeline of Installation
	Subsection 4c: Summary list of Manufacturers products provided
	Subsection 4d: Product brochures, literature, third party reports and/or reviews or specifications sheets
Section 5:	Price Proposal
Section 6:	Subcontractors (if any)
Attachments:	Proof of Authorized Distributor Status
	Copy of Contractors C-60 License
	Wage Certificate
	Sample Invoice
	Proof of Compliance Documents

Additional information about the specific requirements of each section follow.

4.7 Proposal Identification and Information Form

Offeror shall submit the Proposal under the company's exact legal name as registered with the Department of Commerce and Consumer Affairs, if applicable, and shall indicate exact legal name in the appropriate space on the Proposal Identification and Information Form. Failure to do so may result in rejection of the proposal or delay proper execution of a resulting contract, if any.

The authorized signature on the Proposal Identification and Information Form shall be an original signature in ink. If unsigned or if the affixed signature is other than an original signature (such as a facsimile or a photocopy), the proposal shall be automatically rejected unless accompanied by other material containing an original authorized signature, indicating the Offeror's intent to be bound.

4.8 Executive Summary

The executive summary shall summarize the contents of the Proposal in a way that gives readers a broad understanding of the entire Proposal and must also contain the following:

Terms and Conditions - A statement that the Offeror understands and shall comply with all terms and conditions of the RFP (including the General Conditions). If an Offeror does not plan to comply with one or more of the terms or conditions of the RFP, this must be stated; All exceptions must be listed and fully described. The JUDICIARY reserves the right to accept or not accept any exceptions.

Assumptions or Constraints - A statement on whether the Proposal contains any assumptions or constraints and must also identify and describe each such assumption and constraint. If neither assumptions nor constraints are included in the Proposal, a statement to that effect must be made.

Deviations - If the Proposal deviates from the specifications or requirements of the RFP, a statement must be included identifying and describing each such deviation. If no deviations are included in Offeror's Proposal, a statement to that effect must be made.

Subcontracting - A statement that the products and services of the proposed solution shall be provided solely by the Offeror or whether a subcontractor(s) shall assist. The Offeror's use of subcontractor(s) requires the prior written approval of the JUDICIARY.

Taxable Transaction - Work to be performed under this solicitation is a business activity taxable

under Chapter 237, HRS, and vendors are advised that they may be liable for payment of the Hawaii General Excise Tax (GET). If an Offeror is a person exempt by the HRS from paying the GET and therefore not liable for the taxes on this solicitation, Offeror shall state its tax exempt status and cite the HRS chapter or section allowing the exemption.

Pending Litigation - The Offeror shall disclose any pending litigation to which they are a party, including the disclosure of any outstanding judgment. If applicable, please explain how litigation may materially impact the Offeror or the Offeror's ability to fully perform and complete the contract.

Other Notable Items - The Offeror shall disclose any other items of note that may have material impact the Offeror or the Offeror's ability to fully perform and complete the contract.

4.9 Offeror Qualifications

This section of the Proposal shall include the following:

4.9.1 Offeror History and Background.

The Offeror shall describe its corporate background and experience including its size and resources, details of corporate experience relevant to the project and a list of other current or recent related projects by providing the following:

4.9.1.1 General information about the Offeror's organization.

4.9.1.2 Information about Offeror's Corporate, and if different, Hawaii business office loCAtion, which includes Offeror's addresses, telephone numbers, fax numbers, email addresses, and website address as applicable.

4.9.1.3 Number of consecutive years of experience in successfully providing similar systems and services.

4.9.1.4 A description summary of Offeror's operation and structure that demonstrates the Offeror's ability to service multiple project orders similar in size and scope of this RFP successfully.

4.9.1.5 A financial summary that illustrates the Offeror's overall business capacity and ability to accomplish work similar to that contemplated in this RFP.

4.9.2 Project History List

Offeror shall provide a listing of five (5) representative completed projects in government projects and/or institutional environments. These are to include clients name, clients address, current telephone number and name of an employee most familiar with the project, brief description of the project, and time period over which each project was completed.

The Offeror grants the JUDICIARY authorization to contact any of the Offeror's previous clients, including but not limited to those included on the project listing, to evaluate the Offeror and its work. JUDICIARY site visits, if any, may also be conducted at one or more of the client reference sites.

4.9.3 Project Team Organization

The Offeror shall present an organizational chart of staff who will be assigned to work on the contract. Descriptive information for personnel, indicating their titles, major areas of responsibility and location during each phase of the contract, with proposed estimates of the staff-hours to be provided by each individual.

4.9.3.1 Project Team Staffing. The Offeror shall include specific information regarding the role and function of its assigned staff. Including any professional design or engineering staff designing tie-in to existing distribution system. The Offeror shall also provide resume/vita, or certificates as noted. If the Offeror's solution involves use of subcontractors

in an amount greater than 10% of the project's budget, resumes of any subcontractors shall also be included.

4.9.3.2 Technical, Service, and Training Personnel. The Offeror shall include specific information regarding the role and function of its staff assigned to perform installation, training, warranty, and technical support services for this contract along with a short narrative that includes their knowledge, skills, and experience in performing similar work.

Offeror shall include the number of employees on staff to take and process orders, invoice, as well as deliver, install, train, and provide warranty service on the equipment.

4.9.3.3 Installers. Offeror shall have at least two (2) manufacturer-trained and, if applicable, certified installers. If Offeror does not have installation capabilities, Offeror shall arrange for a third-party provider to furnish a trained installer. Offeror shall identify all manufacturer-trained and certified technical and service staff assigned to the project team along with their years of experience. Offeror shall provide proof through documentation/certification to substantiate this experience.

4.9.3.4 Point-of-Contact. The Offeror shall designate at least one (1) employee as the JUDICIARY point-of-contact (POC) for this contract. The Offeror shall provide the POC's name, address, job title, toll-free telephone number, fax number, and email address. This POC shall be permanently based in the State of Hawaii at the time of submission of proposal and during the contract period. This individual shall be capable of answering questions, resolving problems, and providing sales, ordering, and follow-up assistance. The POC shall be available to receive calls from the JUDICIARY during regular business hours, Monday through Friday, excluding holidays. Alternate and backup personnel who may serve in place of the main POC during vacation or other periods of unavailability may also be identified.

4.10 Proposed Solution; Technical Proposal; Timeline of Installation

In this section, Offers shall include:

- Offerors proposed solution
- Offerors timeline to implement proposed solution
- Offerors maintenance program
- A summary list of manufacturers and products provided.
- Product brochures, literature, third party reports and/or reviews, and/or specifications sheets.
- A description of Offeror's maintenance, monitoring and trouble service call policies including escalation procedures.
- A description of Offeror's customer satisfaction policy, including inquiry/dispute resolution procedures.

4.11 Price Proposal

The price proposal shall be inclusive of all costs, direct or indirect, and all applicable taxes, as required for the fulfillment of the contract.

The price proposal shall include a breakdown of the minimum equipment and quantities to be provided for the fulfillment of the contract.

The price proposal must address tasks described in the scope of work, and any other tasks necessary, and specify all costs to be incurred within the contract period. Where cost items are not fixed, the Offeror shall estimate the proposed cost and provide an explanation regarding the methodology used to reach the cost estimate. This shall include a break-out by contract time/hours as one underlying rationale for the cost estimate. The costs in the proposal shall be based on equivalent market prices, and have been arrived at independently without consultation, communication, as to any matter related to such prices with any other Offeror for this RFP.

4.12 Subcontractors

The Offeror may propose to fulfill any of the responsibilities outlined herein by entering into a sub-contract with an individual, organization, or other entity that possesses the requisite expertise to fulfill the requirements of the RFP. The Offeror shall retain sole responsibility for the completion of all tasks. The use of sub-contractors shall not place additional burdens or demands on the JUDICIARY (e.g., coordinating with staff from multiple Contractors).

For any item listed herein to be fulfilled by a sub-contractor, the Offeror shall provide a description of the proposed sub-contractor's capability to meet the demands of the RFP. In the event the Offeror elects to engage the participation of a sub-contractor, the JUDICIARY retains the right to approve the selection of the sub-contractor and the proposed role that the Offeror shall fulfill under this contract.

If a proposal involves the use of a subcontractor for any significant portion of the work, the subcontractor shall also comply with the Offeror qualifications requirements identified in the following sections:

Offeror History and Background
Project Team Organization
Project Team Staffing

4.12.1 Attachments

4.12.2 Authorized Distributor

Offeror is requested to provide documentation from the manufacturer which verifies Offeror's status as an authorized distributor.

4.12.3 Contractor's License

All system work shall be performed by a company with a C-60 Contractor's license. Offeror shall provide their contractor license(s) numbers. License numbers must also be provided for all subcontractors' licenses doing significant or specialty work on the project. A C-60 specialty License is required. This licenses shall be current at the time of submittal and throughout the contract period.

4.12.4 Wage Certificate

See RFP Appendix B. Contractor must provide a certified payroll with each relevant billing.

4.12.5 Sample Invoice

Offeror shall provide a sample of Offeror's usual and customary invoice. The invoice should be clearly legible, in a generally accepted invoice format and must include at minimum, following:

- Name of payee (vendor name);
- Remittance address;
- InvCAe number field;
- InvCAe date field;
- Customer bill to address field;
- Description of the goods/services provided; and
- Amount of payment requested for the described goods/services

4.12.6 Proof of Compliance Documents

Offeror is advised that if awarded a Contract under this RFP, Offeror shall, upon award of Contract, furnish the required certificates and documentation (refer to RFP section1.19 regarding Responsibility of Offerors). In order to expedite contract execution, if any, it is highly recommended that the certificates be submitted with the Offeror's Proposal as follows, one (1) original only:

A. Certificate of Compliance as issued by the Hawaii Compliance Express online system
B. Certificate of Insurance

4.13 Certification of Independent Cost Determination

By submitting a proposal in response to this solicitation, Offeror certifies as follows:

4.13.1 The costs in this RFP have been arrived at independently, without consultation, communication, or agreement with any other Offeror, as to any matter relating to such costs for the purpose of restricting competition.

4.13.2 Unless otherwise required by law, the costs that have been quoted in this RFP have not been knowingly disclosed by the Offeror prior to award, directly or indirectly, to any other Offeror or competitor prior to the award of the contract.

4.13.3 No other attempt has been made or will be made by the Offeror to indicate any other person or firm to submit or not to submit for the purpose of restricting competition.

5. PROPOSAL EVALUATION

The JUDICIARY reserves the right to reject any or all Proposals, and waive any defects if the JUDICIARY believes the rejection or waiver to be in the best interest of the JUDICIARY.

The evaluation will be based solely on the evaluation criteria detailed in this RFP, and shall be performed by the selected members of the Evaluation Committee consisting of at least **three (3) Judiciary employees.**

Evaluation criteria and the associated points are listed below. Quantitative scoring techniques will be utilized to maximize the objectivity of the evaluation.

A contract may be awarded on the basis of initial Proposals received, without discussion. Therefore, each initial proposal shall contain the Offeror's best terms from a technical and cost/price standpoint.

Proposals may be classified initially as acceptable, potentially acceptable, or unacceptable. Discussions may be conducted with Offerors who submit proposals determined to be acceptable or potentially acceptable of being selected for award, but proposals may be accepted without such discussions.

The final selection of a Successful Offeror, if any, will be made in accordance with the evaluation criteria as specified herein.

5.1 Evaluation Process Overview

The Evaluation Committee will apply a numerical rubric to evaluate the proposals. The following sections describe the evaluation process in more detail.

Phase 1: Preliminary Evaluation of Proposals
Phase 2: Rating and Determination of Priority Listed Offerors
Phase 3: Discussion with Priority-Listed Offerors (at JUDICIARY's option)
Phase 4: Best and Final Offers (at JUDICIARY's option)
Phase 5: Selection and Award

5.2 Evaluation Criteria

Scoring under this RFP shall be based on a total of three hundred (300) points. Proposers must score a minimum of two hundred (200) points to be considered for award. Proposals that score less than 200 points will be rejected and shall not be considered for award.

For evaluation purposes, pursuant to §103D-1008, HRS, a tax-exempt proposal submitted in response to a solicitation shall be increased by the applicable retail rate of general excise tax and the applicable use tax. Under no circumstance shall the dollar amount of the award include the aforementioned adjustment.

I. <u>System provides 400 or more kWh (Sixty (60) points)</u>

A total of 60 points will be awarded to any proposal providing 400 kWh or more will receive 60 points. Those between 300 and 400 kWh will receive 40 points, between 200 and 300 kWh 30 points, those 200 or less will receive 10 points.

II. <u>Understanding of Functional Requirements and Technical Write-Up (Fifty (50) points)</u>

Ten (10) points for each question.

1. Offeror has a good understanding of the specification requirements of this RFP
2. Offeror clearly states the steps and efforts needed to install the PV system
3. Offerors description of how the PV system will be installed

4. Offeror includes proper documentation with their proposal
5. Offeror's proposed system ptovides 400 kWh and has the ability to adapt to expansion of the PV system as funding may become available.

III. Qualifications, Experience & Track Record of Firm & Staff (Thirty (30) points)

Five (5) points for each question.

1. Offeror's description of their firm and a current statement of qualification
2. Offeror's plan to provide suitable staffing to service the PV installation
3. Staff location to respond to problems, questions, and assistance
4. Offeror provides the qualifications and/or certifications of the Offeror's staff and principals assigned to this project and qualifications/certifications are applicable to this project and the Judiciary's need and requirements
5. Offeror's years in the business
6. Offeror's system proven to have been successfully installed and operated in government and/or institutional environments

IV. Offeror's Ability to Administer & Service the Project (Five (5) points)

Five (5) points for each question.

1. Offeror provides phone support with toll free phone and fax numbers

V. Maintenance, Training & Support to Be Provided (Sixty (60) points)

Ten (10) points for each question.

1. Offeror authorized to service the proposed equipment
2. Service center capability of providing hardware maintenance described in the RFP
3. Offeror's warranty coverage
4. Maintenance coverage of all equipment, hardware, and software meets requirements
5. Comprehensive training program available to train Judiciary staff during normal business hours
6. Offeror provides software upgrades for free as part of maintenance at no cost to the Judiciary

VI. Equipment, Products & Services (Twenty (20) points)

Five (5) points for each question.

1. Proposed equipment supports integration as necessary of the Judiciary's software, hardware, and network
2. Proposed equipment is new and of the quality required
3. Third party reports or reviews substantiate the performance, reliability, reputation, and value of the products offered
4. Proposed equipment capability to provide a PV and Battery system to meet the needs of the JDF.

VII. Price Proposal & Reasonableness of Price & Services (Seventy-five (75) points)

A total of 75 points will be awarded to the lowest of the submitted cost proposals that meet the minimum qualifications. Proposals with higher costs will receive a fraction of 75 points; the number of points assigned to higher cost proposals will be determined by the following formula: lowest proposal cost multiplied by the maximum point available for price, divided by the higher proposal cost. The fractional value of points to be assigned will be rounded to one decimal place.

Example: Lowest price proposal was $50,000 and receives 75 points. The next lowest cost proposal was $70,000 and receives 53.57 points [(Lowest Proposal Price)*(75)] / (Higher Proposal Price).

5.3 Preliminary Evaluation

A preliminary evaluation shall determine whether each proposal is considered responsive, thus justifying further evaluation. In its preliminary evaluation, the JUDICIARY will examine the completeness of each proposal, and its compliance with the instructions, terms and conditions in this RFP. Subsequent review and evaluation will be based on the criteria stated in the following sections. Any proposals that are incomplete or that do not comply with the instructions or terms and conditions shall be rejected by the JUDICIARY and excluded from further consideration.

Responsive proposals must meet all submittal requirements and the minimum eligibility requirements described in the RFP.

5.4 Priority-List of Offerors

Before conducting discussions, a priority list shall be generated by the Evaluation Committee. In order to generate a priority list, proposals shall be initially classified as acceptable, potentially acceptable or unacceptable.

All responsive Offerors who submit acceptable proposals or potentially acceptable proposals are eligible for the prioritized listing.

If numerous acceptable and potentially acceptable proposals are submitted, the Evaluation Committee may limit the priority list to at least three (3) responsible Offerors who submitted the highest-ranked proposals.

5.5 Discussions with Priority-Listed Offerors

Discussions may be conducted with Priority-Listed Offerors if deemed advantageous by the JUDICIARY. Discussions will be limited to only "priority-listed" offerors and are held 1) to promote understanding of the JUDICIARY requirements and the priority-listed offeror's proposals and 2) to facilitate arriving at a contract that will provide the best value to the JUDICIARY, taking into consideration the evaluation factors set forth in the RFP. Discussions may include Offeror presentation of its Proposal, interviews with Offeror's key personnel, demonstrations, site visits, or teleconferences. Any discussions shall be conducted in an organized and consistent manner established by the JUDICIARY, and in accordance with the following:

5.5.1 Priority-listed offerors shall be accorded fair and equal treatment with respect to any opportunity for discussions and revisions of proposals.

5.5.2 Any substantial oral clarification of a proposal shall be reduced to writing by the priority-listed Offeror.

5.5.3 If during discussions there is a need for any substantial clarification or change in the RFP, the RFP shall be amended by an addendum to incorporate the clarification or change. Addenda to the RFP shall be distributed only to the priority-listed offerors.

5.5.4 Priority-listed offerors may be permitted to amend proposals already submitted, limited to the discussions conducted.

5.5.5 If in the opinion of the Evaluation Committee a contemplated amendment will significantly change the nature of the procurement, the RFP shall be canceled and a new RFP will be issued.

5.5.6 The contents of any proposal shall not be disclosed so as to be available to competing offerors during the discussion process.

5.6 Best and Final Offers (at JUDICIARY's Option)

Following discussions between the Evaluation Committee and the Priority-listed Offerors, each Priority-listed Offeror may be asked to provide their best and final offer. In that event, the procedure as listed below shall apply.

5.6.1 The Evaluation Committee will establish a date and time for submission of best and final offers.

5.6.2 Offerors may be afforded the opportunity to revise their proposals, including price, during the best and final offer phase.

5.6.3 If an Offeror does not submit a notice of withdrawal or a best and final offer, the Offeror's immediate previous proposal will be construed as their best and final offer.

5.6.4 After best and final proposals are received, final evaluations will be conducted for an award.

5.6.5 Best and final offers shall be submitted only once, unless the Head of the Purchasing Agency determines that it is in the JUDICIARY's best interest to conduct additional discussions or change the JUDICIARY's requirements by addendum distributed only to priority-listed offerors and require another submission of best and final offers. Otherwise, no discussion of or change in the best and final offers shall be allowed prior to award.

APPENDICES:

Appendix A: Standard Qualification Questionnaire for Offerors

Appendix B Proposal Identification and Information Form

Appendix B: Wage Certificate

Appendix C: Contract Minimum and Special Conditions

Appendix D: Record Drawings for the Ronald TY Moon Judiciary Complex (for information only)

Appendix E: Locations for Temporary Parking Area and for the Electrical Connection for the Photovoltaic System

Appendix F: Public Works Division's General Conditions

APPENDIX B

DESIGN, FURNISH, INSTALL, AND MAINTAIN
A PHOTOVALTAIC SYSTEM WITH BATTERY STORAGE
FOR THE
RONALD TY MOON JUDICAIRY COMPLEX IN KAPOLEI
RFP J19313
PROPOSAL IDENTIFICATION AND INFORMATION FORM

Exact Legal Name of Offeror, including "dba" or "division" of a corporation (furnish the exact legal name of the entity under which an awarded contract, if any, will be executed):	
Principal Place of Business (may not be a P.O. Box):	
Mailing Address (only if different):	
Offerors Primary Contact Person:	Name/Title:_____ Telephone/Fax No.s:_____ e-mail address:_____
Federal Tax Identification Number:	
State of Hawaii General Excise Tax License Number:	
Type of Business Entity (check one):	☐ Sole Proprietor ☐ Partnership ☐ Corporation ☐ Joint Venture ☐ Limited Liability Company ☐ Other _____
If other than a Sole Proprietorship:	Offeror is either: ☐ A **Hawaii business** incorporated or organized under the laws of the State of Hawaii; **OR** ☐ A **Compliant Non-Hawaii business** incorporated or organized under the laws of the State of_____, and registered with the State of Hawaii Department of Commerce and Consumer Affairs Business Registration Division to do business in the State of Hawaii. Date of incorporation/organization:_____ All state(s) where Offeror is authorized to transact business:_____ _____ Names of all Offeror's parent, affiliate and subsidiary organizations:_____ _____

The undersigned certifies that the information provided above is to the best of his/her knowledge true and correct, has carefully read and understands the terms and conditions specified herein and hereby submits the following proposal to perform the work specified herein, all in accordance with the true intent and meaning thereof, and further that the Offeror shall comply with all terms, conditions and requirements of the RFP. The undersigned further understands and agrees that by submitting this offer, 1) he/she is declaring his/her offer is not in violation of Chapter 84, Hawaii Revised Statutes, concerning prohibited State contracts, and 2) he/she is certifying that the price(s) submitted was (were) independently arrived at without collusion.

_____ _____

Authorized (Original in ink) Signature Name (printed)

_____ _____

Title Date

Appendix C

WAGE CERTIFICATE

Subject: Project No. RFP J19313

Description of Project: Design, Furnish, Install, and Maintain a Potovoltaic System with Battery Storage for the Ronald TY Moon Judiciary Complex in Kapolei

Pursuant to §103-55, HRS, I hereby certify that, if awarded a contract in excess of $25,000.00, the services to be performed will be performed in accordance with the following conditions:

1. The services to be rendered shall be performed by employees paid at wages or salaries not less than wages paid to the public officers and employees for similar work, if similar positions are listed in the classification plan of the public sector.

2. All applicable laws of the federal and state governments relating to workers' compensation, unemployment compensation, payment of wages, and safety will be fully complied with.

CONTRACTOR shall be obliged to notify its employees performing work under this contract of the provisions of §103-55, HRS, and the current wage rate for public employees performing similar work. The CONTRACTOR may meet this obligation by posting a notice to this effect in the CONTRACTOR's place of business accessible to all employees, or the CONTRACTOR may include such notice with each paycheck or pay envelope furnished to the employee

I understand that, in addition to the base wages required by §103-55, HRS, all payments required by federal and state laws that employers must make for the benefit of their employees shall be paid.

Offeror: _____

Signature: _____

Title: _____

Date: _____

Appendix D
CONTRACT MIMINUM AND SPECIAL CONDITIONS

1.1 Contract Administrator

For purposes of this contract, the person named below or his/her duly authorized representative or successor in office is designated Contract Administrator (CA). The CA may be contacted as follows:

- _____, Principal
- Telephone: 808-
- Facsimile: 808-
- E-mail:

- The CA is responsible for:

- The terms, conditions, quantities, specifications, scope of services, other contract terms, and all decisions relating to the contract;
- Monitoring the Contractor's work, documenting that Contractor maintains the required insurance coverage (if applicable), resolving contract disputes and discrepancies, evaluating the work of the Contractor, assuring the services or goods are delivered as required in the contract, and processing payment for services rendered; and
- Notifying the Procurement and Contracts Branch in the event of change in scope of work, change in the performance period, increase or decrease in total compensation, and/or changes in any other contract terms.

Notwithstanding the responsibilities set forth hereinabove, any coordination of services falling outside those articulated above shall remain with the Judiciary Officer in Charge.

1.2 Verification of CONTRACTOR Employees

In accordance with State rules and regulations, CONTRACTOR shall supply information including Social Security number for all persons who will be working the job so that the Judiciary may conduct a mandatory criminal background check. Any person working the job that does not pass the background check will not be allowed to work the job.

1.3 Liability Insurance and Certificates

The CONTRACTOR shall at his own expense maintain insurance in full force and effect during the life of this contract. The policy or policies of insurance maintained by Contractor shall provide the following limits and coverage:

a) Commercial General Liability Insurance (occurrence form) of $1,000,000.00 per occurrence and $2,000,000.00 aggregate.

b) Automobile Insurance in the amount of $1,000,000.00 bodily injury per person, $1,000,000 bodily injury per accident, and $1,000,000.00 property damage per accident.

c) Workers' Compensation and Employer's Liability. Part A – Statutory. Part B, Employers Liability $100,000.00 each accident/$100,000.00 disease each employee/$500,000.00 disease policy limit.

The Contractor will immediately provide written notice to the contracting department or agency should any of the insurance policies evidenced on its Certificate of Insurance form be cancelled, limited in scope, or not renewed upon expiration. Furthermore, The Judiciary shall be added as an additional insured as respects to operations performed for The

Judiciary, State of Hawaii, and it is agreed that any insurance maintained by The Judiciary, State of Hawaii will apply in excess of, and not contribute with, insurance provided by this policy.

Failure of the contractor to provide and keep in force such insurance shall be regarded as material default under this contract, entitling the Judiciary to exercise any or all of the remedies provided in this contract for a default of the contractor.

Prior to execution of the contract, the successful offeror shall provide proof of coverage of insurance requirements set forth under this section.

1.4 Invoicing

The Offeror shall submit an invoice with each request for payment. Original and one (1) copy of the invoice shall be submitted to:

Judiciary – State of Hawaii
_____
_____
Attn: _____

All invoices shall reference the Contract number. If a copy is submitted as the original, such invoice must bear an original signature certifying that the invoice is being submitted as the original.

1.5 Payment

Section 103-10, HRS, provides that the JUDICIARY shall have thirty (30) calendar days after receipt of an accepted invoice and satisfactory delivery of goods or performance of the services, to make payment. For this reason, the JUDICIARY shall reject any Proposal submitted with a condition requiring payment within a shorter period. Further, the JUDICIARY shall reject any Proposal submitted with a condition requiring interest payments greater than that allowed by section 103-10, HRS. The JUDICIARY will not recognize any requirements established by the Offeror and communicated to the JUDICIARY after award of the contract, which requires payment within a shorter period or interest payment not in conformance with section 103- 10, HRS.

1.6 Final Payment

The **final payment** on the contract shall be for services rendered during the billing period just prior to the contract expiration date. In addition to the requirements in the General Conditions, the following shall accompany the final payment invoice:

A tax clearance certificate, not over two months old and with an original green "certified copy" stamp, must accompany the invoice for final payment.

In lieu of the above, CONTRACTOR may also submit an original CERTIFICATE OF VENDOR COMPLIANCE as issued by the State Procurement Office via an online system, also referred to as "Hawaii Compliance Express". Details regarding this online application process can be viewed at: http://vendors.ehawaii.gov/hce/.

All required certificate(s) for the Contractor and all subcontractors, must accompany the invoice for final payment on the Contract.

1.7 Availability of Funds

This contract is subject to the availability of funds. Pursuant to Section 103D-309, HRS, except in certain instances, no contract entered into between the JUDICIAY and the CONTRACTOR shall be binding or of any force unless the Fiscal Officer certifies that there is an available unexpended appropriation or balance of an appropriation over and above all outstanding contracts sufficient to cover the amount required by the contract.

If the contract calls for performance or payment in more than one fiscal year (July 1 to June 30), the Fiscal Officer may certify only that portion of the total funds allocated to satisfy the JUDICIARY's obligations for payments in the current fiscal year. In that event, the JUDICIARY will not be liable for the unpaid balance beyond the end of the current fiscal year, and availability of funds in excess of the amount certified shall be contingent upon future appropriations or special fund revenues. All partially-funded contracts shall be enforceable only to the extent that funds are certified as available. The JUDICIARY agrees to notifythe CONTRACTOR of such non-allocation at the earliest possible time. The JUDICIAY shall not be penalized in the event this provision is exercised. This provision is not meant to permit the JUDICIARY to terminate the contract in order to acquire similar equipment or services from a third party.

1.8 Subcontracting

Prior to award of the contract, no work or services shall be subcontracted or assigned without the prior written approval of the CA. After award of the contract, no work or services shall be subcontracted or assigned without the prior written approval of the CA. No subcontract shall under any circumstances relieve the CONTRACTOR of its obligations and liability under its Contract with the JUDICIARY. All persons engaged in performing the work covered by the Contract shall be considered employees of the CONTRACTOR.

1.9 Contract Staffing Requirements

Personnel, whose names and resumes are submitted in the Proposal, shall not be removed from the project without prior approval of the CA. Substitute or additional personnel shall not be used for the project until a resume is received and approved by the CA. The JUDICIARY shall have the right, and the CONTRACTOR shall comply with any request, to remove and replace any personnel from all work on the project effective immediately upon notification by the JUDICIARY. Personnel changes that are not approved by the CA may be grounds for Contract termination.

1.10 Exclusion of Specific Workers

The JUDICIARY reserves the right to require the CONTRACTOR to remove an employee, agent, subcontractor or volunteer (Worker) from performing work under this contract. The Officer in Charge shall notify the CONTRACTOR in writing and this exclusion of a specific Worker(s) shall take effect as indicated on the notice. The CONTRACTOR may appeal this decision to the Officer in Charge, in writing within ten (10) working days of receipt of the notice. Removal of the employee, agent, subcontractor or volunteer shall remain in effect pending the outcome of the appeal. This provision shall not infringe upon the right of the CONTRACTOR to employ the removed individual, but shall apply to any work requiring interaction with the JUDICIARY, its employees or students.

1.11 Inspection and Procedural Changes; Relief Available to State

All work is subject to inspection, evaluation, and approval by the CA. The JUDICIARY may employ all reasonable means to ensure that the work is being performed in compliance with the contract. Should the CA determine that corrections or changes are necessary in order to accomplish the intent or purpose of the contract, the CA may direct the CONTRACTOR to make such changes.

Failure of the CONTRACTOR to perform any provisions of the Contract (based on the identified portion of unacceptable work received) the JUDICIARY may determine CONTRACTOR is in non-compliance with Contract requirements and may:

- Suspend Payments – Temporarily withhold or disallow all or part of the billing cost/payments pending correction of a deficiency or a non-submission of a required deliverable by the Contractor;
- Seek Reimbursement – Seek reimbursement from the Contractor or withhold future paymentsfor any funds paid to the Contractor subsequent to a determination that such was unauthorized,

fraudulently obtained, or inappropriately billed.

- Seek Market Value – In the event the Contractor fails, refuses or neglects to perform the services in accordance with the requirements of these Special Conditions, the Scope of Services or the General Conditions, the State reserves the right to purchase, in the open market, a corresponding quantity of the services specified herein and to deduct from any monies due or that may thereafter become due to the Contractor, the difference between the price named in the Contract and the actual cost to the State. In case any money due the Contractor is insufficient for said purpose, the Contractor shall pay the difference upon demand from the State. The State may also utilize all other remedies provided by law.

1.12 Approvals

Any agreement arising out of this RFP may be subject to the approval of the Judiciary's Staff Attorney as to form, and is subject to all further approvals, including the approval of the Administrative Director of Courts, required by statute, regulation, rule, order, or other directive.

Appendix E

RONALD TY MOON
JUDICIARY COMPLEX PLANS

ATTACHED

FIELD RECORD DRAWINGS PROVIDED FOR INFORMATION ONLY

Appendix F

RONALD TY MOON

JUDICIARY COMPLEX PLANS

ATTACHED.

Locations for Temporary Parking Area and for the Electrical Connection for the Photovoltaic System

APPENDIX G: PUBLIC WORKS DIVISION GENERAL CONDITION

STATE OF HAWAII

STANDARD

QUALIFICATION QUESTIONNAIRE

FOR

OFFERORS

To be filed with the procurement officer calling for offers

in accordance with Section 103D-310, HRS, as amended.

Submitted By_____

Address_____

Date

_____

SPO Form-21

STANDARD QUALIFICATION QUESTIONNAIRE

COVERING EXPERIENCE, EQUIPMENT AND FINANCIAL STATEMENT OF OFFERORS. THE OFFICER CALLING FOR OFFERS MAY REQUIRE THE OFFEROR TO FURNISH ADDITIONAL INFORMATION NOT SPECIFICALLY COVERED HEREIN. ALL ITEMS MUST BE ANSWERED AND OMISSIONS MAY BE CONSIDERED GOOD CAUSE FOR UNFAVORABLE CONSIDERATION.

GENERAL INFORMATION

I. The statements contained in this Questionnaire are being furnished for consideration in submitting an offer for the following project:

(a) Project Title Kapolei Court Complex Solar Voltaic Project with Battery Storage

(b) Location 4675 Kapolei Parkway Kapolei, HI 96707

(c) Qualifying Bid Due Date_____

2. The Questionnaire is being submitted in behalf of:

(a) Name of Offeror_____

D A Corporation
D A Partnership
D An Individual
D A Joint-Venture

(b) Address _____

(c) Telephone No. _____

(d) Date Submitted_____

3. If the bid is submitted by a joint venture, composed of two or more individual firms, then each member firm comprising the joint venture must submit all information listed on pages 3 through I 6, inclusive, of the Questionnaire and, in addition, answer the following:

(a) Members of joint Venture _____

(b) Date of Joint Venture Agreement_____

(c) Is agreement between members comprising the joint venture joint and several liability? _____
If not, state the terms of agreement in this respect:_____

_____
_____
_____

EXPERIENCE QUESTIONNAIRE

Submitted by _____ D A Corporation
D A Partnership
D An Individual

Principa1 0ffice_____

The signatory of this questionnaire guarantees the truth and accuracy of all statements and of all answers to interrogatories hereinafter made

1. How many years has your organization been in business as a [General Contractor] under your present business name? _____

2. How many years experience in [construction]_____has your organization had: (A) as a [General Contractor]_____; (B) as a [Sub-Contractor] _____

3. Show what [construction] projects your organization has completed in the past five (5) years in the following tabulation:

Contract Amt.	Class of Work	When Completed	Name and Address of Owner

4. Have you ever failed to complete any work awarded to you?_____, If so, state when, where and why?_____

_____
_____
_____

5. Has any officer or partner of your organization in the past five (5) years been an officer or partner of some other organization that failed to complete a contract? If so, state name of individual, other organization and reason therefore _____

_____

_____

6. Has any officer or partner of your organization in the past five (5) years failed to complete a contract handled in his own name?_____ If so state the name of individual, name of Owner and reason therefore.

_____

_____

_____

7. In what other lines of business are you financially interested?

_____

_____

_____

8. For what corporations or individuals in the past five (5) years have you performed work, and to whom do you refer?

_____

_____

_____

_____

_____

_____

9. For what counties within the State of Hawaii have you performed work and to whom do you refer?

_____

_____

_____

_____

_____

I 0. For what Bureaus or Departments of the State government ·have you performed work and to whom do you refer?

_____

_____

_____

_____

_____

_____

11. Have you performed work for the U. S. Government?___

If so, when and to whom do you refer?

_____

_____

_____

_____

_____

12. Have you ever performed any work for any other governmental agencies outside the State of Hawaii? If so, when and to whom do you refer?

_____
_____
_____
_____
_____

13. What is the [construction] experience of the principal individuals of your organization?

Individual's Name	Present Position or Office	Years of Work Experience	Magnitude and Type of Work	In What Capacity?

FINANCIAL STATEMENT

Submitted by ----------

D A Corporation
D A Partnership
D An Individual

Principal Office_____

The signatory of this questionnaire guarantees the truth and accuracy of all statements and of all answers to interrogatories hereinafter made

BALANCE SHEET

As of_____, 20__

Current assets:	
Cash and cash equivalents (I)	$ _____
Short-term investments (2)	_____
Accounts receivable, net (3)	_____
Inventories (4)	_____
Costs and estimated earnings in excess of billings on uncompleted contracts (5)	_____
Prepaid expenses and other (6)	_____
Sub-Total Current Assets	_____
Property and equipment:	
Land (7)	_____
Buildings (8)	_____
Vehicles, machinery and equipment (9)	_____
Furniture and fixtures (I 0)	_____
Less accumulated depreciation	(_____)
Sub-Total Net Property and Equipment	_____
Other assets:	
Cash surrender value of life insurance policies (II)	_____
Deposits and other (12)	_____
Sub-Total Other Assets	_____
Total Assets:	$ _____

BALANCE SHEET (Continued)

Liabilities agd Stockholder's Equity

Current liabilities:	
Current portion of long-term debt (I)	$ _____
Accounts payable (2)	_____
Billings in excess of costs and estimated earnings on uncompleted contracts (3)	_____
Accrued liabilities and other (4)	_____
Sub-Total Current Liabilities	_____
Long-term debt, net of current portion (5)	_____
Sub-Total Liabilities & Long-term Debt:	$ _____
Stockholder's equity:	
Capital stock (6)	_____
Additional paid-in capital (7)	_____
Retained earnings	_____
Treasury stock (8)	_____
Sub-Total Stockholder's Equity	$ _____
Total Liabilities and Stockholder's Equity	$ _____

DETAILS RELATIVE TO ASSETS

(1) Cash and cash equivalents:

Financial Institution	Type of Account	Amount
		$
		$

(2) Short-term investments:

Type of Security	Cost	Unrealized Gains	Unrealized Losses	Estimated Fair Value
	$	$	$	$

(3) Accounts receivable (list major debtors):

Completed contracts

Name	Description	Completion Date	Contract Amount	Amount Receivable
		$	$	$
		$	$	$

Other than completed contracts

Name	Description	Due Date	Amount Receivable
Less allowance for doubtful accounts			(}
			$

(4) Inventories

Description	Cost	Market Value	Lower of Cost or Market Value
	$	$	$
	$	$	$

DETAILS RELATIVE TO ASSETS (Coptinued)

(5) Costs and estimated earnings in excess of billings on uncompleted contracts

Name	Description	Completion Date	Contract Amount	Costs and Estimated Earnings to Date	Billings to Date	Costs and Earnings in Excess of
			$	$	$	$
			$	$	$	$
			$	$	$	$

(6) Prepaid expenses and other

Description	Amount
	$
	$

(7) Land

Description	Location	Amount
		$
		$

(8) Buildings

Description	Location	Amount
		$

(9) Vehicles, machinery and equipment

Description	Amount
	$
	$

(10) Furniture and fixtures

Description	Amount
	$
	$

DETAIL'S RELATIVE TO ASSET (Continued)

(11) Cash surrender value of life insurance policies

Key Employee	Insurance Company	Policy Amount	Paid-Up Additional Insurance	CSV Amount
		$	$	$
Less loans payable				( )
		$	$	$

(12) Deposits and other

Description	Amount
	$
	$

DETAILS RELATIVE TO LIABILITIES AND STOCKHOLDER'S EQUITY

(1) Current portion of long-term debt (maturing within 12 months)

Lender	Description	Security Pledged	Due Date	Amount
				$
				$

(2) Accounts payable (list major creditors)

Name	Past Due Amount	Amount
	$	$
	$	$

(3) Billings in excess of costs and estimated earnings on uncompleted contracts

Name	Description	Completion Date	Contract Amount	Costs and Estimated Earnings to Date	Billings to Date	Billings in excess of costs and Estimated Earnings
			$	$	$	$
			$	$	$	$

(4) Accrued liabilities and other

Description	Amount
	$
	$

(5) Long-term debt, net of current portion

Lender	Description	Security Pledged	Due Date	Amount
				$
				$

DETAILS RELATIVE TO LIABILITIES AND STOCKHOLDER'S EQUITY (Continued)

(6) Capital stock

Type of Stock	Class	No. of Shares Authorized	No. of Shares Issued and Outstanding	Par Value	Amount
					$
					$

(7) Additional paid-in capital

Description	Amount
	$
	$

(8) Treasury stock

Type of Stock	Class	No.of Shares	Cost
			$
			$

STATEMENTS OF INCOME AND RETAINED EARNINGS

For the Years Ended_____,20__ and 20 __

	20__	20__
Contract revenues	$_____	$_____
Costs of contracts		
Gross income from contracts	$_____	$_____
General and administrative expenses		
Income from operations		
Other income (expense)		
Income before income taxes	$_____	$_____
Income taxes		
Net income	$_____	$_____
Retained earnings, beginning of the year	_____	_____
Retained earnings, end of the year	$_____	$_____

If a corporation, answer this:	If a partnership, answer this:	
Capital paid in cash, $	Date of organization	
When Incorporated	Date registered in Hawaii	
In what State	State whether partnership is general or limited	
Date registered in Hawaii		
President's name	Name and address of partners:	Age
Vice-President's name		
Secretary's name		
Treasurer's name		

The undersigned hereby declares: that the foregoing is a true statement of the financial condition of the individual, partnership or corporation herein first named, as of the date herein first given; that this statement is for the express purpose of inducing the party to whom it is submitted to award the offeror a contract; and that any depository, vendor or other agency herein named is hereby authorized to supply such party with any information necessary to verify this statement.

N PT E: A partnership must give firm name and signatures of all _partners. A corporation must give full corporate name, signature of official, and affix corporate seal.

Affidavit for Individual

STATE OF HAWAII
COUNTY OF__________________

______________________________, being duly sworn, deposes and says that the foregoing financial statement, taken from his books, is a true and accurate statement of his financial condition as of the date thereof and that the answers to the foregoing interrogatories are true.

Sworn to before me this
_____________________ day of ________________ 20__

(Applicant must also sign here)

____
Notary Public

Affidavit for Partnership

STATE OF HAWAII
COUNTY OF___________________

being duly sworn, deposes and says that he 1s a member ot the hrm of ______________________________; and that he 1s familiar with the books of the said hrm showing Its financial cond1t1on: that the foregoing financial statement, taken from the books of the said firm, is a true and accurate statement of the financial condition of the saia firm as of the date thereof and that the answers to the foregoing interrogatories are true.

Sworn to before me this
_____________________ day of________________20_

(Members of firm must also sign here)

____
Notary Public

Affidavit for Corporation

STATE OF HAWAII
COUNTY OF

______________________________ being duly sworn, deposes and says that he 1s ______________ orthe ______________________ the corporation described in and which executed the foregoing statement; that he 1s familiar with the books of the said corporation showing its financial condition, that the fore oing financial statement, taken from the books of the said corporation, is a true and accurate statement of the financial condition of said corporation as of the date thereof and that the answers to the foregoing interrogatories are true.

Sworn to before me this
_____________________ day of_____________________20_

(Officer must also sign here)

____
Notary Public

KAPOLEI JUDICIARY COMPLEX

T.M.K.: 9-1-016: 001 (PORTION LOT 80001-C-1)
KAPOLEI PARKWAY, HAWAII

DAGS JOB NO. 12-21-7043

FOR
THE JUDICIARY
STATE OF HAWAII
AND THE
DEPARTMENT OF ACCOUNTING AND GENERAL SERVICES
DIVISION OF PUBLIC WORKS
STATE OF HAWAII

VOLUME 1

CONSULTANTS

ARCHITECT
Architects Hawaii, Ltd.
ASB TOWER, SUITE 300
1001 Bishop Street, Suite 300
Honolulu, HI 96813
(808) 523-9636
FAX: 521-3280
E-Mail: ahl@architects-hawaii.com

CIVIL ENGINEER
Mitsunaga & Associates, Inc.
747 Amana Street, Suite 216
Honolulu, HI 96814
(808) 945-7882
FAX: 946-2563
E-Mail: general@mitsdesign.com

STRUCTURAL ENGINEER
Mitsunaga & Associates, Inc.
747 Amana Street, Suite 216
Honolulu, HI 96814
(808) 945-7882
FAX: 946-2563
E-Mail: general@mitsdesign.com

MECHANICAL ENGINEER
Thermal Engineering Corp.
512 Kalihi Street
Honolulu, HI 96819
(808) 848-6966
FAX: 848-6964
E-Mail: engineering@thermaleng.com

Lincoln Scott, Ltd.
1132 Bishop Street, Suite 1850
Honolulu, HI 96813
(808) 536-1737
FAX: 537-5829
E-Mail: scott.inasuko@lincolnescott.com

ELECTRICAL ENGINEER
ESC, Inc.
615 Piikoi Street, Suite 207
Honolulu, HI 96814
(808) 591-8181
FAX: 591-9098
E-Mail: ecs@lava.net

Nakamura,Oyama & Assoc, Inc.
1314 S. King Street, Suite 401
Honolulu, HI 96814
(808) 591-8887
FAX: 596-2383
E-Mail: goyama@hawaii.rr.com

LANDSCAPE
Brownlie & Lee
201 Merchant Street, Suite 1930
Honolulu, HI 96813
(808) 528-4643
FAX: 531-8191
E-Mail: richard@blhawaii.com

ACCESSIBILITY
Accessibility Planning & Consulting, Inc.
1164 Bishop Street, Suite 1202
Honolulu, HI 96813
(808) 545-1141
FAX: 531-7737
E-Mail: adexpert@hawaii.rr.com

ARCHITECT/DETENTION
Integrus Architecture
10 South Cedar
Spokane, Wa 99204
(509) 838-8681
FAX: (509)838-2194
E-Mail: gwinker@integrus.net

SECURITY/COMMUNICATIONS
Justice Systems
1065-12th Ave. NW, Suite E-3
Issaquah, WA 98027-1310
(425) 392-2328
FAX: (425)392-3825
E-Mail: paul_allyn@jsc-us.com

FOOD SERVICE
Mizo & Associates, Inc.
408 N. Kuakini Street, Suite 1
Honolulu, HI 96817
(808) 526-1774
FAX: 531-3235
E-mail: mizoinc@hawaii.rr.com

ACOUSTICAL
Y. Ebisu & Associates
1126 12th Avenue, #305
Honolulu, HI 96816
(808) 735-1634
FAX: 732-0409
E-Mail: ebisuyassoc@aol.com

FIRE PROTECTION
S. S. Dannaway & Associates, Inc.
720 Iwilei Road, Suite 412
Honolulu, HI 96817
(808) 526-9019
FAX:(808) 537-5385
E-Mail: ssda@hawaii.rr.com

SURVEY
M & E Pacific, Inc.
Pauahi Tower, Suite 500
Honolulu, HI 96813
(808) 521-3051
FAX:(808) 524-0246
E-Mail: george.yoshimura@m-e.aecom.com

GEOTECHNICAL
Ernest K. Hirata & Associates
99-1433 Koaha Place
Aiea, HI 96701
(808) 486-0870
FAX: 486-0870
E-Mail: mail@hirata-hawaii.rr.com

VERTICAL TRANSPORTATION
Elevations, Inc.
2555 Malama Place
Honolulu, HI 96822
(808) 988-6583
FAX: 988-6571
E-Mail: elevations.neil@verizon.net

VICINITY MAP

N.T.S.

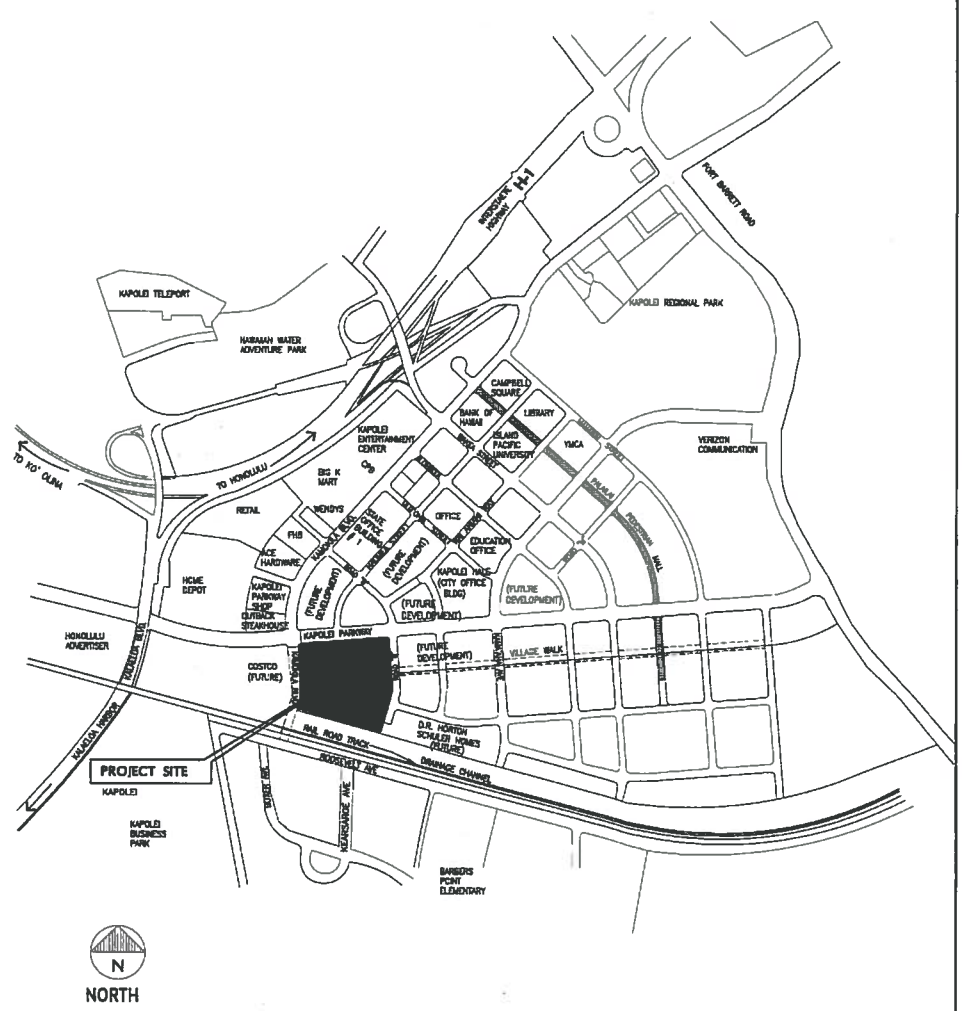

LOCATION MAP

N.T.S.

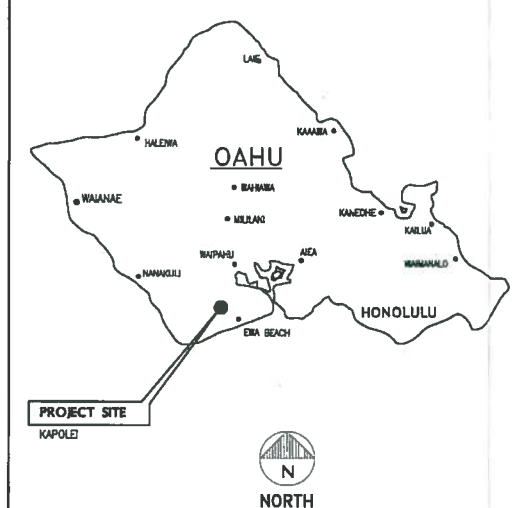

APPROVALS

ADMINISTRATIVE DIRECTOR OF THE COURTS THE JUDICIARY STATE OF HAWAII	DATE 11/7/06
COMPTROLLER DEPARTMENT OF ACCOUNTING AND GENERAL SERVICES STATE OF HAWAII	DATE 11/17/06
PUBLIC WORKS ADMINISTRATOR DEPARTMENT OF ACCOUNTING AND GENERAL SERVICES STATE OF HAWAII	DATE 11/17/06
CHIEF, ENVIRONMENTAL HEALTH SERVICES DIVISION DEPARTMENT OF HEALTH STATE OF HAWAII	DATE

REVISION NO.	SYM.	DESCRIPTION	SHT. OF	DATE	APPROVED: PUBLIC WORKS ADMINISTRATOR

LLOYD T. ARAKAKI
LICENSED PROFESSIONAL ARCHITECT
No. 5338
HAWAII, U.S.A.

This work was prepared by me or under my supervision and constitutes of the extent will be under my observation. (Observation of construction as defined in Chapter 16-115, Subchapter 1, Rules of the Hawaii Administrative Rules, "Professional Engineers, Architects, Surveyors, and Landscape Architects.")

04/30/06
expiration date of the license

NOTE: Contractor to check and verify dimensions at job before proceeding with work.

DEPT. OF ACCOUNTING & GENERAL SERVICES
DIVISION OF PUBLIC WORKS
STATE OF HAWAII

KAPOLEI JUDICIARY COMPLEX
KAPOLEI, OAHU, HAWAII

TITLE SHEET
VOLUME 1

ARCHITECTS HAWAII, LTD.

DESIGNED BY: DB	CHECKED BY: MK	BASIS JOB NO. 12-21-7043	DRAWING NO. G-001
DRAWN BY: AHL	APPROVED BY: LA	DATE NOV 2006	SHEET 1 OF 1021 SHTS.
SCALE: AS SHOWN			

WKK

FIELD POSTED RECORD DRAWINGS Date November 6, 2012
Certified by Unlimited Construction Services, Inc

INDEX TO DRAWINGS

VOLUME 1 - COURT COMPLEX

SHT NO	DWG NUMBER	DESCRIPTION
		VOLUME 1
		COURT COMPLEX
1	G-001	TITLE SHEET VOLUME 1
2	G-002	ABBREVIATIONS, GENERAL NOTES, SYMBOLS, MATERIALS & PARTITIONS, DIMENSIONING
3	G-003	ZONING & CODE INFORMATION
4	G-004	VOLUME 1 DRAWING INDEX
5	G-005	VOLUME 1 DRAWING INDEX
6	G-006	VOLUME 1 DRAWING INDEX
7	G-007	VOLUME 2 DRAWING INDEX
8	G-008	VOLUME 2 DRAWING INDEX
9	G-009	VOLUME 3 DRAWING INDEX
10	G-010	VOLUME 3 DRAWING INDEX
11	G-A001	COURT COMPLEX - AREA CALCULATIONS
12	G-A002	COURT COMPLEX - AREA CALCULATIONS
13	G-B001	JUVENILE DETENTION FACILITY - AREA CALCULATIONS
14	G-C001	CENTRAL PLANT - AREA CALCULATIONS
		CIVIL
15	B-101	BORING LOCATIONS & NOTES
16	B-102	BORING LOG - 1
17	B-103	BORING LOG - 2
18	B-104	BORING LOG - 3
19	B-105	BORING LOG - 4
20	C-001	GENERAL NOTES - 1
21	C-002	GENERAL NOTES - 2
22	C-101	GENERAL SITE PLAN
23	C-102	SITE PLAN - 1
24	C-103	SITE PLAN - 2
25	C-104	SITE PLAN - 3
26	C-105	SITE PLAN - 4
27	C-106	GENERAL UTILITY PLAN
28	C-107	UTILITY PLAN - 1
29	C-108	UTILITY PLAN - 2
30	C-109	UTILITY PLAN - 3
31	C-110	UTILITY PLAN - 4
32	C-111	GENERAL SITE ELEVATION / GRADING & DRAINAGE PLAN
33	C-112	SITE ELEVATIONS / GRADING & DRAINAGE PLAN 1
34	C-113	SITE ELEVATIONS / GRADING & DRAINAGE PLAN 2
35	C-114	SITE ELEVATIONS / GRADING & DRAINAGE PLAN 3
36	C-115	SITE ELEVATIONS / GRADING & DRAINAGE PLAN 4
37	C-116	EROSION CONTROL PLAN
38	C-201	DRAINLINE PROFILES - 1
39	C-202	DRAINLINE PROFILES - 2
40	C-203	DRAINLINE PROFILES - 3
41	C-204	DRAINLINE PROFILES - 4
42	C-205	SEWERLINE PROFILES - 1
43	C-206	SEWERLINE PROFILES - 2
44	C-207	WATERLINE PROFILES - 1
45	C-208	WATERLINE PROFILES - 2
46	C-209	WATERLINE PROFILES - 3
47	C-210	GASLINE PROFILE
48	C-210G2	SITE CROSS SECTIONS
49	C-501	DRAINAGE DETAILS
50	C-502	CURB RAMP DETAILS 1
51	C-503	CURB RAMP DETAILS 2
52	C-504	FENCE DETAILS
53	C-505	FENCE & CHAINLINK BARRIER DETAILS
54	C-506	PARKING DETAILS
55	C-507	ROADWAY DETAILS
56	C-508	BENCH & WALL DETAILS
57	C-509	SLIDING GATE & WALL DETAILS
58	C-510	GATE DETAILS
59	C-511	MISCELLANEOUS DETAILS
60	C-512	MISCELLANEOUS DETAILS - 02
61	C-513	SITE PLAN - INSET 1
62	C-514	SITE PLAN - INSET 2
63	C-515	SITE PLAN - INSET 3
64	C-516	SITE ELEVATION PLAN - INSET 1
65	C-517	SITE ELEVATION PLAN - INSET 2
66	C-518	SITE ELEVATION PLAN - INSET 3
67	C-519	ROCK SCULPTURE SITE PLAN & DETAILS

SHT NO	DWG NUMBER	DESCRIPTION
		LANDSCAPE
68	L-A-101	LANDSCAPE PLAN
69	L-A-102	PARTIAL LANDSCAPE PLAN
70	L-A-103	PARTIAL LANDSCAPE PLAN
71	L-A-104	PLANT LIST & DETAILS
72	L-A-105	PARTIAL IRRIGATION PLAN
73	L-A-106	PARTIAL IRRIGATION PLAN
74	L-A-107	PARTIAL IRRIGATION PLAN
75	L-A-108	IRRIGATION LEGEND AND DETAILS
		STRUCTURAL
76	S-101	GENERAL NOTES
77	S-A101	PARTIAL BASEMENT FLOOR & FOUNDATION PLAN
78	S-A102	PARTIAL BASEMENT FLOOR & FOUNDATION PLAN
79	S-A103	PARTIAL 1ST FLOOR FRAMING & FOUNDATION PLAN
80	S-A104	PARTIAL 1ST FLOOR FRAMING & FOUNDATION PLAN
81	S-A105	PARTIAL 2ND FLOOR FRAMING PLAN
82	S-A106	PARTIAL 2ND FLOOR FRAMING PLAN
83	S-A107	PARTIAL 3RD FLOOR FRAMING PLAN
84	S-A108	PARTIAL 3RD FLOOR FRAMING PLAN
85	S-A109	PARTIAL 4TH FLOOR FRAMING PLAN
86	S-A110	PARTIAL 4TH FLOOR FRAMING PLAN
87	S-A111	PARTIAL ROOF FRAMING PLAN
88	S-A112	PARTIAL ROOF FRAMING PLAN
89	S-A113	PARTIAL ROOF FRAMING PLAN
90	S-A114	PARTIAL ROOF FRAMING PLAN
91	S-A201	STAIR 1 PLANS
92	S-A202	STAIR 1 SECTIONS AND DETAILS
93	S-A203	STAIR 1 SECTIONS AND DETAILS
94	S-A204	STAIR 2 PLANS
95	S-A205	STAIR 2 SECTIONS AND DETAILS
96	S-A206	STAIR 3 AND PRIVATE ELEVATOR 3 PLANS
97	S-A207	STAIR 3 AND ELEVATOR SECTIONS
98	S-A208	STAIR 3 AND ELEVATOR SECTIONS
99	S-A209	STAIR 3 AND ELEVATOR SECTIONS
100	S-A210	STAIR 4 AND SECURED ELEV 5 PLANS
101	S-A211	STAIR 4 SECTIONS AND DETAILS
102	S-A212	SECURED ELEVATOR 5 SECTIONS AND DETAILS
103	S-A213	STAIR 5 AND 6 AND ELEVATOR PLANS
104	S-A214	STAIR 5 AND 6 AND ELEVATOR PLANS
105	S-A214A	STAIR 6 SECTIONS AND DETAILS
106	S-A215	PRIVATE ELEVATOR SECTIONS AND DETAILS
107	S-A216	STAIR 5 SECTIONS AND DETAILS
108	S-A217	STAIR 6 SECTIONS AND DETAILS
109	S-A218	PUBLIC ELEVATOR PLANS
110	S-A219	PUBLIC ELEVATOR SECTIONS AND DETAILS
111	S-A220	PUBLIC ELEVATOR SECTIONS AND DETAILS
112	S-A221	SECURED ELEVATOR 1 AND 2 PLANS
113	S-A222	SECURED ELEVATOR 1 AND 2 SECTIONS AND DETAILS
114	S-A223	SECURED ELEVATOR 4 PLANS
115	S-A224	SECURED ELEVATOR 4 SECTIONS AND DETAILS
116	S-A401	TYPICAL SLAB-ON-GRADE DETAILS
117	S-A402	TYPICAL FOUNDATION DETAILS
118	S-A403	FOUNDATION SCHEDULE AND DETAILS
119	S-A501	TYPICAL WALL DETAILS
120	S-A601	COLUMN SCHEDULE
121	S-A601A	TYPICAL COLUMN ELEVATION & DETAILS
122	S-A602	TYPICAL BEAM ELEVATION & DETAILS
123	S-A603	BEAM SCHEDULE
124	S-A604	BEAM SCHEDULE
125	S-A605	BEAM SCHEDULE
126	S-A606	BEAM SCHEDULE
127	S-A607	BEAM SCHEDULE
128	S-A608	BEAM SCHEDULE
129	S-A609	BEAM SCHEDULE
130	S-A610	BEAM SCHEDULE
131	S-A611	BEAM SCHEDULE
132	S-A612	BEAM SCHEDULE
133	S-A613	BEAM SCHEDULE
134	S-A614	BEAM SCHEDULE
135	S-A614A	BEAM SCHEDULE
136	S-A614B	BEAM SCHEDULE

SHT NO	DWG NUMBER	DESCRIPTION
137	S-A701	TYPICAL SUSPENDED SLAB & PRECAST FLOOR DETAILS
138	S-A801	TYPICAL STRUCTURAL STEEL SCHEDULES
139	S-A802	TYPICAL STRUCTURAL STEEL DETAILS
140	S-A803	STEEL TRUSS ELEVATIONS
141	S-A804	STEEL TRUSS DETAILS
		ARCHITECTURAL
	A-A101	NOT USED
142	A-A102	OVERALL BASEMENT FLOOR PLAN
143	A-A103	OVERALL 1ST FLOOR PLAN
144	A-A104	OVERALL 2ND FLOOR PLAN
145	A-A105	OVERALL 3RD FLOOR PLAN
146	A-A106	OVERALL 4TH FLOOR PLAN
147	A-A107	OVERALL ROOF PLAN
148	A-A108	OVERALL BASEMENT FLOOR REFLECTED CEILING PLAN
149	A-A109	OVERALL 1ST FLOOR REFLECTED CEILING PLAN
150	A-A110	OVERALL 2ND FLOOR REFLECTED CEILING PLAN
151	A-A111	OVERALL 3RD FLOOR REFLECTED CEILING PLAN
152	A-A112	OVERALL 4TH FLOOR REFLECTED CEILING PLAN
153	A-A113	PARTIAL BASEMENT FLOOR PLAN
154	A-A114	PARTIAL BASEMENT FLOOR PLAN
155	A-A115	PARTIAL 1ST FLOOR DIMENSION PLAN
156	A-A116	PARTIAL 1ST FLOOR PLAN
157	A-A117	PARTIAL 1ST FLOOR DIMENSION PLAN
158	A-A118	PARTIAL 1ST FLOOR PLAN
159	A-A119	PARTIAL 2ND FLOOR DIMENSION PLAN
160	A-A120	PARTIAL 2ND FLOOR PLAN
161	A-A121	PARTIAL 2ND FLOOR DIMENSION PLAN
162	A-A122	PARTIAL 2ND FLOOR PLAN
163	A-A123	PARTIAL 3RD FLOOR DIMENSION PLAN
164	A-A124	PARTIAL 3RD FLOOR PLAN
165	A-A125	PARTIAL 3RD FLOOR DIMENSION PLAN
166	A-A126	PARTIAL 3RD FLOOR PLAN
167	A-A127	PARTIAL 4TH FLOOR DIMENSION PLAN
168	A-A128	PARTIAL 4TH FLOOR PLAN & ROOF PLAN
169	A-A129	PARTIAL 4TH FLOOR DIMENSION PLAN
170	A-A130	PARTIAL 4TH FLOOR PLAN
171	A-A131	PARTIAL ROOF PLAN
172	A-A132	PARTIAL ROOF PLAN
173	A-A133	PARTIAL BASEMENT FLOOR REFLECTED CEILING PLAN
174	A-A134	PARTIAL BASEMENT FLOOR REFLECTED CEILING PLAN
175	A-A135	PARTIAL 1ST FLOOR REFLECTED CEILING PLAN
176	A-A136	PARTIAL 1ST FLOOR REFLECTED CEILING PLAN
177	A-A137	PARTIAL 2ND FLOOR REFLECTED CEILING PLAN
178	A-A138	PARTIAL 2ND FLOOR REFLECTED CEILING PLAN
179	A-A139	PARTIAL 3RD FLOOR REFLECTED CEILING PLAN
180	A-A140	PARTIAL 3RD FLOOR REFLECTED CEILING PLAN
181	A-A141	PARTIAL 4TH FLOOR REFLECTED CEILING PLAN
182	A-A142	PARTIAL 4TH FLOOR REFLECTED CEILING PLAN
183	A-A143	ENTRY FLOOR & REFLECTED CEILING PLAN
184	A-A144	LARGE NON-JURY COURTROOM ENLARGED FLOOR & RC PLANS
185	A-A145	TYP. NON-JURY COURTROOM ENLARGED FLOOR & RC PLANS
186	A-A146	ENLARGED RESTROOMS & ELEVATIONS
187	A-A147	ENLARGED RESTROOMS & ELEVATIONS
188	A-A148	ENLARGED RESTROOMS & ELEVATIONS
189	A-A149	ENLARGED RESTROOMS & ELEVATIONS
190	A-A150	ENLARGED RESTROOMS & ELEVATIONS
191	A-A151	ENLARGED RESTROOMS & ELEVATIONS
192	A-A152	ENLARGED RESTROOMS & ELEVATIONS
193	A-A201	NORTH ELEVATION
194	A-A202	WEST & EAST ELEVATION
195	A-A203	SOUTH ELEVATION
196	A-A204	PARTIAL ELEVATION
197	A-A205	DETAIL NORTH ELEVATION
198	A-A206	DETAIL EAST ELEVATION
199	A-A207	DETAIL WEST ELEVATION
200	A-A208	DETAIL NORTH ELEVATION
201	A-A301	BUILDING SECTIONS
202	A-A302	BUILDING SECTIONS
203	A-A303	BUILDING SECTIONS
204	A-A304	WALL SECTIONS
205	A-A305	WALL SECTIONS
206	A-A306	WALL SECTIONS
207	A-A307	WALL SECTIONS
208	A-A308	WALL SECTIONS
209	A-A309	WALL SECTIONS
210	A-A310	WALL SECTIONS

SHT NO	DWG NUMBER	DESCRIPTION
211	A-A401	STAIR-1, LOBBY, PUB. ELEV. 1 2 & 3 DETAIL PLANS
212	A-A402	STAIR-1, LOBBY, PUB. ELEV 1, 2 & 3 DETAIL PLAN & SECTION
213	A-A403	STAIR-1 SECTION
214	A-A404	STAIR-2 DETAIL PLANS & SECTION
215	A-A405	STAIR-3A & 3B, PRIVATE ELEVATOR 3 DETAIL PLANS
216	A-A406	STAIR-3A & 3B, PRIVATE ELEVATOR 3 SECTIONS
217	A-A407	STAIR-4, SECURE ELEVATOR 5 DETAIL PLANS & SECTION
218	A-A408	STAIR-5, PRIVATE ELEVATORS 1 & 2 DETAIL PLANS
219	A-A409	STAIR-5 & 6, SECURE ELEV 3 & PRIVATE ELEV 2 DET PLANS & SECT
220	A-A410	STAIR-5 & 6 SECTIONS
221	A-A411	SECURE ELEVATORS 1 & 2 DETAIL PLANS AND SECTION
222	A-A412	SECURE ELEVATOR 4 DETAIL PLANS AND SECTION
223	A-A415	ADD ALTERNATE: SUPERSIZE JURY COURTROOM ENLARGED PLAN
224	A-A416	ADD ALTERNATE. SUPERSIZE JURY COURTROOM ENLARGED RC PLAN
225	A-A417	ADD ALTERNATE SECURITY HOLDING CELLS FLOOR PLAN
226	A-A418	ADD ALTERNATE SECURITY HOLDING CELLS RC PLAN
227	A-A419	ADD ALTERNATE: ENLARGED PARTIAL 3RD FLOOR PLAN
228	A-A420	ADD ALTERNATE. ENLARGED PARTIAL 3RD FLOOR RC PLAN
229	A-A430	STANDARD MOUNTING HEIGHTS
230	A-A431	INTERIOR ELEVATIONS
231	A-A432	INTERIOR ELEVATIONS
232	A-A433	INTERIOR ELEVATIONS
233	A-A434	INTERIOR ELEVATIONS
234	A-A435	INTERIOR ELEVATIONS
235	A-A436	INTERIOR ELEVATIONS
236	A-A437	INTERIOR ELEVATIONS
237	A-A438	INTERIOR ELEVATIONS
238	A-A439	INTERIOR ELEVATIONS
	A-A440	NOT USED
239	A-A441	INTERIOR ELEVATIONS
240	A-A442	INTERIOR ELEVATIONS
241	A-A443	INTERIOR ELEVATIONS
242	A-A444	INTERIOR ELEVATIONS
243	A-A445	INTERIOR ELEVATIONS
244	A-A446	INTERIOR ELEVATIONS
245	A-A447	INTERIOR ELEVATIONS
246	A-A448	INTERIOR ELEVATIONS
247	A-A449	INTERIOR ELEVATIONS
248	A-A450	INTERIOR ELEVATIONS
249	A-A451	INTERIOR ELEVATIONS
250	A-A452	INTERIOR ELEVATIONS
251	A-A453	INTERIOR ELEVATIONS
252	A-A454	INTERIOR ELEVATIONS
253	A-A455	INTERIOR ELEVATIONS
254	A-A456	INTERIOR ELEVATIONS
255	A-A457	INTERIOR ELEVATIONS
256	A-A458	INTERIOR ELEVATIONS
257	A-A459	INTERIOR ELEVATIONS
258	A-A460	INTERIOR ELEVATIONS
259	A-A461	INTERIOR ELEVATIONS
260	A-A462	INTERIOR ELEVATIONS
261	A-A463	INTERIOR ELEVATIONS
262	A-A464	INTERIOR ELEVATIONS
263	A-A501	PARTITION TYPES
264	A-A502	PARTITION DETAILS
265	A-A503	PARTITION DETAILS

REVISION NO.	SYM.	DESCRIPTION	SHT.__ OF.__	DATE	APPROVED: PUBLIC WORKS ADMINISTRATOR

LLOYD T. ARAKAKI
LICENSED PROFESSIONAL ARCHITECT
No. 5336
HAWAII, U.S.A.

This work was prepared by me or under my supervision and construction of the project will be under my observation. (Observation of construction as defined in Chapter 16-115, Subchapter 1 Definitions of the Hawaii Administrative Rules, "Professional Engineers Architects Surveyors, and Landscape Architects.")

signature — expiration date of the license 04/30/08

NOTE: Contractor to check and verify dimensions at job before proceeding with work

DEPT. OF ACCOUNTING & GENERAL SERVICES
DIVISION OF PUBLIC WORKS
STATE OF HAWAII

KAPOLEI JUDICIARY COMPLEX
KAPOLEI, OAHU, HAWAII

VOLUME 1
DRAWING INDEX

ARCHITECTS HAWAII, LTD.

DESIGNED BY: DB	CHECKED BY: MK	DWG JOB NO. 12-21-7043	DRAWING NO. G-012
DRAWN BY: AHL	APPROVED BY: –	DATE NOV 2006	SHEET 353 OF 1021 SHTS.
SCALE: AS SHOWN			

FIELD POSTED RECORD DRAWINGS
Certified by: Seth Murashige Date: January 29, 2013
Unlimited Construction Services, Inc

INDEX TO DRAWINGS

VOLUME 1 - COURT COMPLEX

SHT NO	DWG NUMBER	DESCRIPTION
266	A-A601	DOOR TYPES
267	A-A602	DOOR SCHEDULE
268	A-A603	DOOR SCHEDULE
269	A-A604	DOOR SCHEDULE
270	A-A605	DOOR SCHEDULE
271	A-A606	DOOR SCHEDULE
272	A-A607	DOOR SCHEDULE - CENTRAL PLANT
	A-A608	NOT USED
	A-A609	NOT USED
273	A-A610	DOOR DETAILS
274	A-A611	DOOR DETAILS
275	A-A612	DOOR DETAILS
276	A-A613	DOOR DETAILS
277	A-A620	WINDOW TYPES
278	A-A621	WINDOW TYPES
279	A-A622	WINDOW TYPES
280	A-A623	WINDOW SCHEDULE
281	A-A624	WINDOW SCHEDULE
	A-A625	NOT USED
282	A-A626	WINDOW DETAILS
283	A-A627	WINDOW DETAILS
284	A-A628	WINDOW DETAILS
285	A-A629	WINDOW DETAILS
286	A-A630	LOUVER DETAILS
287	A-A643	MATERIAL COLOR SCHEDULE
	A-A644	NOT USED
288	A-A645	ROOM FINISH SCHEDULE
289	A-A646	ROOM FINISH SCHEDULE
290	A-A647	ROOM FINISH SCHEDULE
291	A-A648	ROOM FINISH SCHEDULE
292	A-A649	ROOM FINISH SCHEDULE
293	A-A650	ROOM FINISH SCHEDULE
	A-A651	NOT USED
294	A-A652	1ST FLOOR PUBLIC AREA TILE PATTERN PLAN
295	A-A653	2ND FLOOR PUBLIC AREA TILE PATTERN PLAN
296	A-A654	4TH FLOOR PUBLIC AREA TILE PATTERN PLAN
297	A-A661	SIGNAGE MOUNTING HEIGHTS & SIGN TYPES
298	A-A662	SIGNAGE TYPES
299	A-A663	SIGNAGE TYPES
300	A-A664	SIGN SCHEDULE
301	A-A665	SIGN SCHEDULE
302	A-A670	PARTIAL BASEMENT SIGNAGE PLAN
303	A-A671	PARTIAL BASEMENT SIGNAGE PLAN
304	A-A672	PARTIAL 1ST FLOOR SIGNAGE PLAN
305	A-A673	PARTIAL 1ST FLOOR SIGNAGE PLAN
306	A-A674	PARTIAL 2ND FLOOR SIGNAGE PLAN
307	A-A675	PARTIAL 2ND FLOOR SIGNAGE PLAN
308	A-A676	PARTIAL 3RD FLOOR SIGNAGE PLAN
309	A-A677	PARTIAL 3RD FLOOR SIGNAGE PLAN
310	A-A678	PARTIAL 4TH FLOOR SIGNAGE PLAN
311	A-A679	PARTIAL 4TH FLOOR SIGNAGE PLAN
312	A-A680	PARTIAL ROOF SIGNAGE PLAN
313	A-A681	PARTIAL ROOF SIGNAGE PLAN
314	A-A682	SUPERSIZE JURY COURTROOM SIGNAGE PLAN
315	A-A683	SECURITY HOLDING CELLS SIGNAGE PLAN
316	A-A684	NON JURY COURTROOM SIGNAGE PLAN
317	A-A711	WALL DETAILS
318	A-A712	WALL DETAILS
319	A-A713	WALL DETAILS
320	A-A714	WALL DETAILS
321	A-A715	WALL DETAILS
	A-A716	NOT USED
322	A-A717	WALL DETAILS - SPANDREL PANEL
323	A-A718	MISC ROOF DETAILS
324	A-A719	MISC ROOF DETAILS
325	A-A720	MISC ROOF DETAILS
326	A-A721	SHOWER DETAILS
327	A-A722	MISC DETAILS
328	A-A723	MISC DETAILS
329	A-A724	WATERPROOFING & MISC DETAILS
330	A-A725	EXPANSION JOINT DETAILS
331	A-A726	MISCELLANEOUS DETAILS
332	A-A727	MISCELLANEOUS DETAILS
	A-A740	NOT USED
333	A-A741	JURY COURTROOM MILLWORK PLAN
334	A-A742	JURY COURTROOM MILLWORK ELEVATIONS
335	A-A743	JURY COURTROOM MILLWORK SECTIONS

SHT NO	DWG NUMBER	DESCRIPTION
336	A-A744	JURY COURTROOM MILLWORK SECTIONS
337	A-A745	LARGE NON-JURY COURTROOM MILLWORK PLAN
338	A-A746	TYPICAL NON-JURY COURTROOM MILLWORK PLAN
339	A-A747	NON-JURY COURTROOM MILLWORK ELEVATIONS
340	A-A748	NON-JURY COURTROOM MILLWORK SECTIONS
341	A-A749	BAILIFF COUNTER MILLWORK DETAILS
342	A-A750	MILLWORK DETAILS & ELEVATIONS
343	A-A751	MILLWORK DETAILS & ELEVATIONS
	A-A752	NOT USED
344	A-A753	ACOU PANEL & WOOD PLANK CEILING DETAILS
345	A-A754	REFLECTED CEILING DETAILS
346	A-A801	DETENTION DOOR & WINDOW SCHEDULES
347	A-A802	DETENTION NOTES, DOOR, FRAME & WINDOW ELEV
348	A-A803	DETENTION DETAILS
349	A-A804	DETENTION DETAILS
350	A-A805	DETENTION DETAILS
351	A-A806	DETENTION DETAILS
	A-A901	NOT USED
352	A-A902	1ST FLOOR PARTIAL FURNITURE PLAN
353	A-A903	1ST FLOOR PARTIAL FURNITURE PLAN
354	A-A904	2ND FLOOR PARTIAL FURNITURE PLAN
355	A-A905	2ND FLOOR PARTIAL FURNITURE PLAN
356	A-A906	3RD FLOOR PARTIAL FURNITURE PLAN
357	A-A907	3RD FLOOR PARTIAL FURNITURE PLAN
358	A-A908	4TH FLOOR PARTIAL FURNITURE PLAN
359	A-A909	4TH FLOOR PARTIAL FURNITURE PLAN
360	A-A910	SUPERSIZE JURY COURTROOM FURNITURE PLAN
361	A-A911	TYPICAL NON- JURY COURTROOM FURNITURE PLAN
362	01	TOWER CRANE FOOTING
363	02	TOWER CRANE FOOTING
364	03	TOWER CRANE FOOTING
365	P-CT-LR-A	LOW ROOF PLUMBING SHOP DRAWING - COURT HOUSE
366	P-CT-LR-B	LOW ROOF PLUMBING SHOP DRAWING - COURT HOUSE
367	P-CT-LR-C	LOW ROOF PLUMBING SHOP DRAWING - COURT HOUSE
368	P-CT-LR-D	LOW ROOF PLUMBING SHOP DRAWING - COURT HOUSE
369	P-CT-LR-E	LOW ROOF PLUMBING SHOP DRAWING - COURT HOUSE
370	P-CT-LB-A	UNDERGROUND PLUMBING SHOP DRAWINGS - COURT HOUSE
371	P-CT-L1-A	1ST FLOOR PLUMBING SHOP DRAWINGS - COURT HOUSE
372	P-CT-LB-B	UNDERGROUND PLUMBING SHOP DRAWINGS - COURT HOUSE
373	P-CT-L1-B	1ST FLOOR PLUMBING SHOP DRAWINGS - COURT HOUSE
374	P-CT-LB-C	UNDERGROUND PLUMBING SHOP DRAWINGS - COURT HOUSE
375	P-CT-L1-C	1ST FLOOR PLUMBING SHOP DRAWINGS - COURT HOUSE
376	P-CT-LB-D	UNDERGROUND PLUMBING SHOP DRAWINGS - COURT HOUSE
377	P-CT-L1-D	1ST FLOOR PLUMBING SHOP DRAWINGS - COURT HOUSE
378	P-CT-LB-E	UNDERGROUND PLUMBING SHOP DRAWINGS - COURT HOUSE
379	P-CT-L1-E	1ST FLOOR PLUMBING SHOP DRAWINGS - COURT HOUSE
380	P-CT-L2-A	2ND FLOOR PLUMBING SHOP DRAWINGS - COURT HOUSE
381	P-CT-L2-B	2ND FLOOR PLUMBING SHOP DRAWINGS - COURT HOUSE
382	P-CT-L2-C	2ND FLOOR PLUMBING SHOP DRAWINGS - COURT HOUSE
383	P-CT-L2-D	2ND FLOOR PLUMBING SHOP DRAWINGS - COURT HOUSE
384	P-CT-L2-E	2ND FLOOR PLUMBING SHOP DRAWINGS - COURT HOUSE
385	P-CT-L3-A	3RD FLOOR PLUMBING SHOP DRAWINGS - COURT HOUSE
386	P-CT-L3-B	3RD FLOOR PLUMBING SHOP DRAWINGS - COURT HOUSE
387	P-CT-L3-C	3RD FLOOR PLUMBING SHOP DRAWINGS - COURT HOUSE
388	P-CT-L3-D	3RD FLOOR PLUMBING SHOP DRAWINGS - COURT HOUSE
389	P-CT-L3-E	3RD FLOOR PLUMBING SHOP DRAWINGS - COURT HOUSE
390	P-CT-L4-A	4TH FLOOR PLUMBING SHOP DRAWINGS - COURT HOUSE
391	P-CT-L4-B	4TH FLOOR PLUMBING SHOP DRAWINGS - COURT HOUSE
392	P-CT-L4-D	4TH FLOOR PLUMBING SHOP DRAWINGS - COURT HOUSE
393	P-CT-L4-E	4TH FLOOR PLUMBING SHOP DRAWINGS - COURT HOUSE
394	CT-LR	ROOF LEVEL - DRYSIDE HVAC SYSTEM LAYOUT
395	M-CT-LR-A	LOW ROOF MECH PIPING DRAWINGS - COURT HOUSE
396	M-CT-LR-B	LOW ROOF MECH PIPING DRAWINGS - COURT HOUSE
397	M-CT-LR-C	LOW ROOF MECH PIPING DRAWINGS - COURT HOUSE
398	M-CT-LR-D	LOW ROOF MECH PIPING DRAWINGS - COURT HOUSE
399	M-CT-LR-E	LOW ROOF MECH PIPING DRAWINGS - COURT HOUSE
400	CT-LB-B	BASEMENT LEVEL - AREA B - DRYSIDE HVAC SYSTEM LAYOUT
401	M-CT-LB-B	BASEMENT MECH PIPING DRAWINGS - COURT HOUSE
402	CT-LB-A	BASEMENT LEVEL - AREA A - DRYSIDE HVAC SYSTEM LAYOUT
403	M-CT-LB-A	BASEMENT MECH PIPING DRAWINGS - COURT HOUSE
404	CT-LB-C	BASEMENT LEVEL - AREA C - DRYSIDE HVAC SYSTEM LAYOUT
405	M-CT-LB-C	BASEMENT MECH PIPING DRAWINGS - COURT HOUSE
406	CT-LB-E	BASEMENT LEVEL - AREA E - DRYSIDE HVAC SYSTEM LAYOUT
407	M-CT-LB-E	BASEMENT MECH PIPING DRAWINGS - COURT HOUSE
408	CT-LB-D	BASEMENT LEVEL - AREA D - DRYSIDE HVAC SYSTEM LAYOUT
409	M-CT-LB-D	BASEMENT MECH PIPING DRAWINGS - COURT HOUSE
410	CT-L1-A	LEVEL 1 - AREA A - DRYSIDE HVAC SYSTEM LAYOUT
411	CT-L1-B	LEVEL 1 - AREA B - DRYSIDE HVAC SYSTEM LAYOUT

SHT NO	DWG NUMBER	DESCRIPTION
412	CT-L1-C	LEVEL 1 - AREA C - DRYSIDE HVAC SYSTEM LAYOUT
413	CT-L1-E	LEVEL 1 - AREA E - DRYSIDE HVAC SYSTEM LAYOUT
414	CT-L1-D	LEVEL 1 - AREA D - DRYSIDE HVAC SYSTEM LAYOUT
415	CT-L2-A	LEVEL 2 - AREA A - DRYSIDE HVAC SYSTEM LAYOUT
416	CT-L2-B	LEVEL 2 - AREA B - DRYSIDE HVAC SYSTEM LAYOUT
417	CT-L2-C	LEVEL 2 - AREA C - DRYSIDE HVAC SYSTEM LAYOUT
418	CT-L2-E	LEVEL 2 - AREA E - DRYSIDE HVAC SYSTEM LAYOUT
419	CT-L2-D	LEVEL 2 - AREA D - DRYSIDE HVAC SYSTEM LAYOUT
420	CT-L3-A	LEVEL 3 - AREA A - DRYSIDE HVAC SYSTEM LAYOUT
421	CT-L3-B	LEVEL 3 - AREA B - DRYSIDE HVAC SYSTEM LAYOUT
422	CT-L3-C	LEVEL 3 - AREA C - DRYSIDE HVAC SYSTEM LAYOUT
423	CT-L3-E	LEVEL 3 - AREA E - DRYSIDE HVAC SYSTEM LAYOUT
424	CT-L3-D	LEVEL 3 - AREA D - DRYSIDE HVAC SYSTEM LAYOUT
425	CT-L4-A	LEVEL 4 - AREA A - DRYSIDE HVAC SYSTEM LAYOUT
426	CT-L4-B	LEVEL 4 - AREA B - DRYSIDE HVAC SYSTEM LAYOUT
427	CT-L4-C	LEVEL 4 - AREA C - DRYSIDE HVAC SYSTEM LAYOUT
428	CT-L4-E	LEVEL 4 - AREA E - DRYSIDE HVAC SYSTEM LAYOUT
429	CT-L4-D	LEVEL 4 - AREA D - DRYSIDE HVAC SYSTEM LAYOUT
430	M-CT-L1-A	1ST FLOOR MECH PIPING DRAWINGS - COURT HOUSE
431	M-CT-L1-B	1ST FLOOR MECH PIPING DRAWINGS - COURT HOUSE
432	M-CT-L1-C	1ST FLOOR MECH PIPING DRAWINGS - COURT HOUSE
433	M-CT-L1-E	1ST FLOOR MECH PIPING DRAWINGS - COURT HOUSE
434	M-CT-L1-D	1ST FLOOR MECH PIPING DRAWINGS - COURT HOUSE
435	M-CT-L2-A	2ND FLOOR MECH PIPING DRAWINGS - COURT HOUSE
436	M-CT-L2-B	2ND FLOOR MECH PIPING DRAWINGS - COURT HOUSE
437	M-CT-L2-C	2ND FLOOR MECH PIPING DRAWINGS - COURT HOUSE
438	M-CT-L2-E	2ND FLOOR MECH PIPING DRAWINGS - COURT HOUSE
439	M-CT-L2-D	2ND FLOOR MECH PIPING DRAWINGS - COURT HOUSE
440	M-CT-L3-A	3RD FLOOR MECH PIPING DRAWINGS - COURT HOUSE
441	M-CT-L3-B	3RD FLOOR MECH PIPING DRAWINGS - COURT HOUSE
442	M-CT-L3-C	3RD FLOOR MECH PIPING DRAWINGS - COURT HOUSE
443	M-CT-L3-E	3RD FLOOR MECH PIPING DRAWINGS - COURT HOUSE
444	M-CT-L3-D	3RD FLOOR MECH PIPING DRAWINGS - COURT HOUSE
445	M-CT-L4-A	4TH FLOOR MECH PIPING DRAWINGS - COURT HOUSE
446	M-CT-L4-B	4TH FLOOR MECH PIPING DRAWINGS - COURT HOUSE
447	M-CT-L4-C	4TH FLOOR MECH PIPING DRAWINGS - COURT HOUSE
448	M-CT-L4-E	4TH FLOOR MECH PIPING DRAWINGS - COURT HOUSE
449	M-CT-L4-D	4TH FLOOR MECH PIPING DRAWINGS - COURT HOUSE
450	FP1	FIRE SUPPRESSION
451	SH522-1	MAIN/RESERVE FM-200 FIRE SUPPRESSION SYSTEMS
452	FP6	COURT COMPLEX BASEMENT
453	FP7	COURT COMPLEX BASEMENT
454	FP8	COURT COMPLEX BASEMENT
455	FP9	COURT COMPLEX BASEMENT
456	FP10	COURT COMPLEX - LEVEL 1
457	FP11	COURT COMPLEX - LEVEL 1
458	FP12	COURT COMPLEX - LEVEL 1
459	FP13	COURT COMPLEX - LEVEL 1
460	FP14	COURT COMPLEX - LEVEL 2
461	FP15	COURT COMPLEX - LEVEL 2
462	FP16	COURT COMPLEX - LEVEL 2
463	FP17	COURT COMPLEX - LEVEL 2
464	FP18	COURT COMPLEX - LEVEL 3
465	FP19	COURT COMPLEX - LEVEL 3
466	FP20	COURT COMPLEX - LEVEL 3
467	FP21	COURT COMPLEX - LEVEL 3
468	FP22	COURT COMPLEX - LEVEL 4
469	FP23	COURT COMPLEX - LEVEL 4
470	FP24	COURT COMPLEX - LEVEL 4
471	FP25	COURT COMPLEX ROOF
472	FP26	COURT COMPLEX ROOF
473	SH522-3	MAIN/RESERVE FM-200 FIRE SUPPRESSION SYSTEMS
474	SH522-4	MAIN/RESERVE FM-200 FIRE SUPPRESSION SYSTEMS
475	SH522-5	MAIN/RESERVE FM-200 FIRE SUPPRESSION SYSTEMS
476	SH522-6	MAIN/RESERVE FM-200 FIRE SUPPRESSION SYSTEMS
477	SH522-7	MAIN/RESERVE FM 200 FIRE SUPPRESSION SYSTEMS
478	SH522-8	MAIN/RESERVE FM-200 FIRE SUPPRESSION SYSTEMS
479	FP3	RISER/STANDPIPE
480	FA1	FIRE ALARM TYPICAL DEVICE WIRING DETAIL & SEQUENCE OF OPERATIONS MATRIX
481	FA2	PARTIAL BASEMENT FIRE ALARM PLAN - 1
482	FA3	PARTIAL BASEMENT FIRE ALARM PLAN - 2
483	FA4	PARTIAL FIRST FLOOR FIRE ALARM PLAN - 1
484	FA5	PARTIAL FIRST FLOOR FIRE ALARM PLAN - 2
485	FA6	PARTIAL 2ND FLOOR FIRE ALARM PLAN - 1
486	FA7	PARTIAL 2ND FLOOR FIRE ALARM PLAN - 2
487	FA8	PARTIAL 3RD FLOOR FIRE ALARM PLAN - 1
488	FA9	PARTIAL 3RD FLOOR FIRE ALARM PLAN - 2
489	FA10	PARTIAL 4TH FLOOR FIRE ALARM PLAN - 1
490	FA11	PARTIAL 4TH FLOOR FIRE ALARM PLAN - 2

SHT NO	DWG NUMBER	DESCRIPTION
491	FA12	ROOF FIRE ALARM PLAN
492	FA13	CENTRAL PLANT FIRE ALARM PLAN
493	FA14	PARTIAL FIRE ALARM RISER - 1
494	FA15	PARTIAL FIRE ALARM RISER - 2
495	FA16	PARTIAL FIRE ALARM RISER - 3
496	FA17	PARTIAL FIRE ALARM RISER - 4
497	FA18	PARTIAL FIRE ALARM RISER - 5
498	FA19	FIRE ALARM MODULAR WIRING DIAGRAM - PARTIAL
499	FA20	FIRE ALARM TRANSPONDER #1 MODULAR WIRING DIAGRAM
500	FA21	FIRE ALARM TRANSPONDER #2 MODULAR WIRING DIAGRAM
501	FA22	FIRE ALARM TRANSPONDER #3 MODULAR WIRING DIAGRAM
502	SE-100	DIVISION 17 - LOW VOLTAGE SYSTEM - FLOOR PLAN/ROOM LAYOUTS AND RISER DIAGRAMS
503	SE-101	SHEET INDEX - FLOOR PLAN/ROOM LAYOUTS AND RISER DIAGRAMS
504	SE-102	SECURITY SYMBOL LEGEND AND NOTES
505	SE-103	PLC SYSTEM BLOCK DIAGRAM
506	SE-104	CCTV SYSTEM BLOCK DIAGRAM
507	SE-105	INTERCOM SYSTEM BLOCK DIAGRAM
508	SE-110	SYSTEM DETAILS VIDEO SURVELLANCE
509	SE-111	SYSTEM MOUNTING DETAILS
510	SE-112	SYSTEM MOUNTING DETAILS
511	SE-113	SYSTEM MOUNTING DETAILS
512	SE-114	CAMERA MOUNTING DETAILS
513	SE-115	DETENTION FACILITY TYPICAL SECURITY EQUIPMENT DETAIL
514	SE-116	TYPICAL PUBLIC INTERCOM & CALL STATION DETAILS
515	SE-117	FACILITY TYPICAL DOOR & CELL SECURITY PLAN
516	SE-201	SITE PLAN
517	SE-202	COURTS COMPLEX - PARTIAL BASEMENT FLOOR SECURITY PLAN
518	SE-203	COURTS COMPLEX - PARTIAL BASEMENT FLOOR SECURITY PLAN
519	SE-204.1	COURTS COMPLEX - JURY COURTROOM ENLARGED PLAN
520	SE-204	COURTS COMPLEX - PARTIAL 1ST FLOOR SECURITY PLAN
521	SE-205.1	COURTS COMPLEX - SECURITY HOLDING CELLS ENLARGED PLAN
522	SE-205	COURTS COMPLEX - PARTIAL 1ST FLOOR SECURITY PLAN
523	SE-206	COURTS COMPLEX - PARTIAL 2ND FLOOR SECURITY PLAN
524	SE-207.1	COURTS COMPLEX - PARTIAL 2ND FLOOR SECURITY PLAN
525	SE-207	COURTS COMPLEX - PARTIAL 2ND FLOOR SECURITY PLAN
526	SE-208.1	COURTS COMPLEX - PARTIAL 3RD FLOOR ENLARGED PLAN
527	SE-208	COURTS COMPLEX - PARTIAL 3RD FLOOR SECURITY PLAN
528	SE-209.1	COURTS COMPLEX - PARTIAL 3RD FLOOR SECURITY PLAN
529	SE-209	COURTS COMPLEX - PARTIAL 3RD FLOOR SECURITY PLAN
530	SE-210	COURTS COMPLEX - PARTIAL 4TH FLOOR SECURITY PLAN
531	SE-211	COURTS COMPLEX - PARTIAL 4TH FLOOR SECURITY PLAN
532	SE-212	COURTS COMPLEX - PARTIAL ROOF SECURITY PLAN
533	SE-213	COURTS COMPLEX & JUVENILE FACILITY - PASSAGEWAY SECURITY
534	SE-214	JUVENILE DETENTION FACILITY - PARTIAL 1ST FLOOR SECURITY PLAN
535	SE-215	JUVENILE DETENTION FACILITY - PARTIAL 1ST FLOOR SECURITY PLAN
536	SE-216	JUVENILE DETENTION FACILITY - PARTIAL 1ST FLOOR SECURITY PLAN
537	SE-217	JUVENILE DETENTION FACILITY - PARTIAL 1ST FLOOR SECURITY PLAN
538	SE-218	JUVENILE DETENTION FACILITY - MEZZANINE FLOOR SECURITY PLAN
539	SE-301	BUILDING CONTROL ROOM 1079 - ELEVATIONS AND DETAILS
540	SE-302	BUILDING CONTROL ROOM 1079 - CONSOLE ELEVATIONS AND DETAILS
541	SE-303	BUILDING CONTROL ROOM 1079 - ENLARGED PLANS
542	SE-304	CUSTODY CONTROL ROOM 1081 - ELEVATIONS AND DETAILS
543	SE-305	CUSTODY CONTROL ROOM 1081 - CONSOLE ELEVATIONS
544	SE-306	CUSTODY CONTROL ROOM 1081 - ENLARGED PLANS
545	SE-307	JDF CENTRAL CONTROL ROOM 103A - ELEVATIONS AND DETAILS
546	SE-308	JDF CENTRAL CONTROL ROOM 103A - CONSOLE ELEVATIONS
547	SE-309	JDF CENTRAL CONTROL ROOM 103A - ENLARGED PLANS
548	SE-310	JDF MOVEMENT CONTROL ROOMS 136A & 136B - ELEVATIONS AND
549	SE-311	JDF MOVEMENT CONTROL ROOMS 136A & 136B - CONSOLE ELEVATIONS
550	SE-312	JDF MOVEMENT CONTROL ROOMS 136A & 136B - ENLARGED PLANS

REVISION NO.	SYM.	DESCRIPTION	SHT__ OF__	DATE	APPROVED: PUBLIC WORKS ADMINISTRATOR

DEPT. OF ACCOUNTING & GENERAL SERVICES
DIVISION OF PUBLIC WORKS
STATE OF HAWAII

LLOYD T. ARAKAKI
LICENSED PROFESSIONAL ARCHITECT
No. 5336
HAWAII, U.S.A.

This work was prepared by me or under my supervision and construction of this project will be under my observation (Observation of construction as defined in Chapter 16-115, Subchapter 1 Definitions of the Hawaii Administrative Rules, Professional Engineers, Architects, Surveyors, and Landscape Architects.)

signature 04/30/08 expiration date of the license

NOTE: Contractor to check and verify dimensions at job before proceeding with work.

KAPOLEI JUDICIARY COMPLEX

KAPOLEI, OAHU, HAWAII

VOLUME 1
DRAWING INDEX

ARCHITECTS HAWAII, LTD.

DESIGNED BY: DB	CHECKED BY: MK	DAGS JOB NO. 12-21-7043	DRAWING NO. G-013
DRAWN BY: AHL	APPROVED BY: -	DATE NOV 2006	SHEET 354 OF 1021 SHTS.
SCALE: AS SHOWN			

FILE ____ DRAW ____ FOLDER ____

FIELD POSTED RECORD DRAWINGS Certified by Seth Marushige Date January 29, 2013
Unlimited Construction Services, Inc

INDEX TO DRAWINGS

VOLUME 1 - COURT COMPLEX

SHT NO	DWG NUMBER	DESCRIPTION
551	SE-313	CONTROL ROOMS 104E, 1027, 1033, & 1100 - PLAN AND ELEVATIONS
552	SE-314	CONTROL ROOMS 2030 2033, 2068, & 4006 - PLAN AND ELEVATIONS
553	SE-401	COURTS SECURITY EQUIPMENT ROOM 1080 - ELEVATIONS AND DETAILS
554	SE-402	JDF SECURITY ELECTRONICS ROOM #103D - ELEVATIONS AND DETAILS
555	SE-403	JDF SECURITY ELECTRONICS ROOM #144B - ELEVATIONS AND DETAILS
556	SE-404	COURTS SECURITY EQUIPMENT ROOMS 0002 AND 1040 - PLAN AND ELEVATIONS
557	SE-405	COURTS SECURITY EQUIPMENT ROOMS 3009, 3057A AND 4034 - PLAN AND ELEVATIONS
558	SE-406	JUVENILE DETENTION FACILITY SECURITY EQUIPMENT ROOM 6015 - PLAN AND ELEVATIONS
559	SE-501	COURTS COMPLEX - SYSTEM RISER DIAGRAM
560	SE-502	COURTS COMPLEX 2ND, 3RD, 4TH, AND ROOF - FLOOR RISER DIAGRAM
561	SE-503	JUVENILE DETENTION FACILITY - SYSTEM RISER DIAGRAM
562	SE-504	JUVENILE DETENTION FACILITY - SYSTEM RISER DIAGRAM
563	SE-100.1	DIVISION 17 - LOW VOLTAGE SYSTEM - SHOP DRAWINGS
564	SE-101.1	SHEET INDEX - SHOP DRAWINGS
565	SE-601	COURTS PLC - SYSTEM BLOCK DIAGRAM
566	SE-602	JDF PLC - SYSTEM BLOCK DIAGRAM
567	SE-603	COURTS CCTV - SYSTEM BLOCK DIAGRAM
568	SE-604	JDF CCTV - SYSTEM BLOCK DIAGRAM
569	SE-605	COURTS INTERCOM- SYSTEM BLOCK DIAGRAM
570	SE-606	JDF INTERCOM- SYSTEM BLOCK DIAGRAM
571	SE-607	COURTS UPS- SYSTEM BLOCK DIAGRAM
572	SE-608	JDF UPS- SYSTEM BLOCK DIAGRAM
573	SE-609	VISITATION INTERCOM - SYSTEM BLOCK AND WIRING DIAGRAM
574	SE-609.1	SUITE INTERCOM - SYSTEM BLOCK DIAGRAM
575	SE-610	CARD ACCESS - SYSTEM BLOCK AND WIRING DIAGRAM
576	SE-611	CARD ACCESS - SCHEDULE
577	SE-612	CARD ACCESS - TYPICAL WIRING DIAGRAMS
578	SE-615	PLC - FIELD DEVICE WIRING DIAGRAMS
579	SE-616	BUILDERS HARDWARE - FIELD DEVICE WIRING DIAGRAMS
580	SE-617	MISC. FIELD DEVICE - WIRING DIAGRAMS
581	SE-617.1	DURESS FIELD DEVICE - WIRING DIAGRAMS
582	SE-617.2	LIGHT BAR FIELD DEVICE - WIRING DIAGRAMS
583	SE-618	CCTV - FIELD DEVICE WIRING DIAGRAMS
584	SE-619	TYPICAL INTERCOM - WIRING LAYOUT
585	SE-620	TYPICAL INTERCOM - WIRING LAYOUT
586	SE-621	TYPICAL INTERCOM - WIRING LAYOUT
587	SE-622	TYPICAL INTERCOM - WIRING LAYOUT
588	SE-630	PHONE AUXILARY CONTROL - WIRING DIAGRAMS
589	SE-631	WATER AUXILARY CONTROL - WIRING DIAGRAMS
590	SE-632	LIGHTING AUXILARY CONTROL - WIRING DIAGRAMS
591	SE-633	LIGHTING AUXILARY CONTROL - WIRING DIAGRAMS
592	SE-634	POWER AUXILARY CONTROL - WIRING DIAGRAMS
593	SE-635	FAN AUXILARY CONTROL - WIRING DIAGRAMS
594	SE-701	SECURITY ELECTRONICS ROOM #1080 - CVR-C1, CVR-C1B, CVR-C1C &
595	SE-702	CUSTODY CONTROL ROOM #1081 - DEVICE POINT TO POINT LAYOUT
596	SE-702.1	CUSTODY #1081 & BUILDING #1079 CONTROL ROOMS - INTERCOM
597	SE-703	BUILDING CONTROL ROOM #1079 - DEVICE POINT TO POINT LAYOUT
598	SE-704	SECURITY ELECTRONICS ROOM #1080 - RACK CVR-C1A, C1B, C1C POINT
599	SE-705	SECURITY ELECTRONICS ROOM #1080 - DVR-C1A & DVR-C1B CABLING
600	SE-706	SECURITY ELECTRONICS ROOM #1080 - DVR-C1C & DVR-C1F CABLING
601	SE-707	SECURITY ELECTRONICS ROOM #1080 - DVR-C1G & DVR-C1H CABLING
602	SE-708	SECURITY ELECTRONICS ROOM #1080 - DVR-C1J CABLING AND
603	SE-710	SECURITY ELECTRONICS ROOM #1080 - RACK IPR-C1 POINT TO POINT
604	SE-711	SECURITY ELECTRONICS ROOM #1080 - RACK IPR-C1 POINT TO POINT
605	SE-712	SECURITY ELECTRONICS ROOM #1080 - RACK IPR-C1 POINT TO POINT
606	SE-713	SECURITY ELECTRONICS ROOM #1080 - RACK CVR-C1B, VIDEO RELAYS
607	SE-720	SECURITY ELECTRONICS ROOM #1080 - ENCLOSURE DCC-C1A LAYOUT
608	SE-721	SECURITY ELECTRONICS ROOM #1080 - ENCLOSURE DCC-C1A POINT TO
609	SE-722	SECURITY ELECTRONICS ROOM #1080 - ENCLOSURE DCC-C1B LAYOUT
610	SE-723	SECURITY ELECTRONICS ROOM #1080 - ENCLOSURE DCC-C1B POINT TO
611	SE-724	SECURITY ELECTRONICS ROOM #1080 - ENCLOSURE DCC-C1C LAYOUT
612	SE-725	SECURITY ELECTRONICS ROOM #1080 - ENCLOSURE DCC-C1C POINT TO POINT
613	SE-726	SECURITY ELECTRONICS ROOM #1080 - ENCLOSURE DCC-C1D LAYOUT
614	SE-727	SECURITY ELECTRONICS ROOM #1080 - ENCLOSURE DCC-C1D POINT TO POINT
615	SE-728	TYPICAL ELEVATOR ENCLOSURE SC-C LAYOUT
616	SE-729	TYPICAL ELEVATOR ENCLOSURE SC-C POINT TO POINT
617	SE-801	SECURITY ELECTRONICS ROOM #103D CVR-D1A, CVS-D1A, AND IPR-D1 RACK ELEVATIONS
618	SE-802	JDF CENTRAL CONTROL ROOM #103A DEVICE POINT TO POINT LAYOUT
619	SE-802.1	JDF CENTRAL CONTROL ROOM #103A INTERCOM MASTER POINT TO POINT LAYOUT
620	SE-803	SECURITY ELECTRONICS ROOM #103D RACK CVR-D1A AND CVS-D1A POINT TO POINT LAYOUT
621	SE-804	SECURITY ELECTRONICS ROOM #103D RACK DVR-D1A AND DVR-D1B CABLING AND SCHEDULE LAYOUT
622	SE-805	SECURITY ELECTRONICS ROOM #103D RACK DVR-D1C AND DVR-D1D CABLING AND SCHEDULE LAYOUT
623	SE-806	SECURITY ELECTRONICS ROOM #103D RACK CVS-D1A POINT TO POINT LAYOUT
624	SE-807	SECURITY ELECTRONICS ROOM #103D RACK CVS-D1A MATRIX POINT TO POINT LAYOUT
625	SE-808	SECURITY ELECTRONICS ROOM #1080, #103D, AND #144B MATRIX AND DVR SCHEDULE LAYOUT
626	SE-809	SECURITY ELECTRONICS ROOM #103D RACK CVS-D1A QUAD POINT TO POINT LAYOUT
627	SE-810	SECURITY ELECTRONICS ROOM #103D RACK IPR-D1 POINT TO POINT
628	SE-811	SECURITY ELECTRONICS ROOM #103D RACK IPR-D1 POINT TO POINT
629	SE-812	SECURITY ELECTRONICS ROOM #103D RACK IPR-D1 POINT TO POINT
630	SE-820	SECURITY ELECTRONICS ROOM #103D ENCLSOURE DCC-D1A LAYOUT
631	SE-821	SECURITY ELECTRONICS ROOM #103D ENCLSOURE DCC-D1A POINT TO POINT LAYOUT
632	SE-822	SECURITY ELECTRONICS ROOM #103D ENCLSOURE DCC-D1B LAYOUT
633	SE-823	SECURITY ELECTRONICS ROOM #103D ENCLSOURE DCC-D1B POINT TO POINT LAYOUT
634	SE-801	SECURITY ELECTRONICS ROOM #144B RACKS CVR-D2 AND IPR-D2 ELEVATIONS
635	SE-902	JDF OFFICERS' CONTROL ROOM 136A AND 136B DEVICE POINT TO POIN LAYOUT
636	SE-902.1	JDF OFFICERS' CONTROL ROOM 136A AND 136B INTERCOM MASTER POINT TO POINT LAYOUT
637	SE-903	JDF OFFICERS' CONTROL ROOM #144B RACK CVR-D2 POINT TO POINT LAYOUT
638	SE-904	SECURITY ELECTRONICS ROOM #144B DVR-D2A CABLING AND SCHEDULE LAYOUT
639	SE-911	SECURITY ELECTRONICS ROOM #144B RACK IPR-D2 POINT TO POINT
640	SE-912	SECURITY ELECTRONICS ROOM #144B RACK IPR-D2 POINT TO POINT
641	SE-920	SECURITY ELECTRONICS ROOM #144B ENCLOSURE DCC-D2A LAYOUT
642	SE-921	SECURITY ELECTRONICS ROOM #144B ENCLOSURE DCC-D2A POINT TO POINT LAYOUT
643	SE-922	SECURITY ELECTRONICS ROOM #144B ENCLOSURE DCC-D2B LAYOUT
644	SE-923	SECURITY ELECTRONICS ROOM #144B ENCLOSURE DCC-D2B POINT TO POINT LAYOUT
645	EC-302	COMMUNICATIONS ROOM ENLARGED PLANS
646	EC-402	CATV SYSTEM DIAGRAMS
647	EC-601	COMMUNICATIONS RACK ELEVATIONS
648	EC-602	COMMUNICATIONS RACK ELEVATIONS
649	EC-A116	PARTIAL 1ST FLOOR COMMUNICATIONS PLAN
650	EC-A117	SUPERSIZE JURY COURTROOM ENLARGED PLAN
651	EC-A118	PARTIAL 1ST FLOOR COMMUNICATIONS PLAN
652	EC-A120	PARTIAL 2ND FLOOR COMMUNICATIONS PLAN
653	EC-A124	PARTIAL 3RD FLOOR COMMUNICATIONS PLAN
654	EC-A125	ENLARGED PARTIAL 3RD FLOOR PLAN
655	EC-A128	PARTIAL 4TH FLOOR COMMUNICATIONS PLAN
656	EC-A130	PARTIAL 4TH FLOOR COMMUNICATIONS PLAN
657	EC-001	COMMUNICATIONS SYMBOL LEGEND & NOTES
658	EC-002	A/V RECORDING SYSTEM OUTLET DETAILS
659	EC-303	TYPICAL NON-JURY COURTROOM A/V RECORDING SYSTEM
660	EC-304	LARGE NON-JURY COURTROOM A/V RECORDING SYSTEM
661	EC-305	JUVENILE DETENTION FACILITY - HEARING ROOM
662	EC-306	JURY COURTROOM A/V RECORDING SYSTEM
663	EC-404	LARGE NON-JURY COURTROOM A/V RECORDING SYSTEM DIAGRAM
664	EC-404.1	LARGE NON-JURY COURTROOM A/V RECORDING SYSTEM DIAGRAM
665	EC-405	JURY COURTROOM A/V RECORDING SYSTEM DIAGRAM
666	EC-406	JDF COURTROOM A/V RECORDING SYSTEM DIAGRAM
667	EC-601	COMMUNICATIONS RACK ELEVATIONS
668	EC-602	COMMUNICATIONS RACK ELEVATIONS
669	EC-603	COMMUNICATIONS RACK ELEVATIONS
670	P-JD-LU-B	1ST FLOOR PLUMBING SHOP DRAWINGS - JDF
671	P-JD-LU-C	1ST FLOOR PLUMBING SHOP DRAWINGS - JDF
672	P-JD-LU-D	1ST FLOOR PLUMBING SHOP DRAWINGS - JDF
673	P-JD-LU-E	1ST FLOOR PLUMBING SHOP DRAWINGS - JDF
674	P-JD-LU-F	1ST FLOOR PLUMBING SHOP DRAWINGS - JDF
675	P-JD-LU-A	1ST FLOOR PLUMBING SHOP DRAWINGS - JDF
676	P-JD-L2-C	2ND FLOOR PLUMBING SHOP DRAWINGS - JDF
677	P-JD-L2-F	2ND FLOOR PLUMBING SHOP DRAWINGS - JDF
678	P-JD-LR-A	ROOF PLUMBING SHOP DRAWING - JDF
679	P-JD-LR-A	ROOF PLUMBING SHOP DRAWING - JDF
680	P-JD-LR-B	ROOF PLUMBING SHOP DRAWING - JDF
681	P-JD-LR-C	ROOF PLUMBING SHOP DRAWING - JDF
682	P-JD-LR-D	ROOF PLUMBING SHOP DRAWING - JDF
683	P-JD-LR-E	ROOF PLUMBING SHOP DRAWING - JDF
684	P-JD-LR-F	ROOF PLUMBING SHOP DRAWING - JDF
685	DF-L1-A	LEVEL 1 - AREA A - DRYSIDE HVAC SYSTEM LAYOUT
686	M-JD-LR-A	ROOF MECH PIPING DRAWING - JDF
687	DF-L1-B	LEVEL 1 - AREA B - DRYSIDE HVAC SYSTEM LAYOUT
688	DF-L1-C	LEVEL 1 - AREA C - DRYSIDE HVAC SYSTEM LAYOUT
689	M-JD-LR-B	ROOF MECH PIPING DRAWING - JDF
690	M-JD-LR-C	ROOF MECH PIPING DRAWING - JDF
691	DF-L1-D	LEVEL 1 - AREA D - DRYSIDE HVAC SYSTEM LAYOUT
692	DF-L1-E	LEVEL 1 - AREA E - DRYSIDE HVAC SYSTEM LAYOUT
693	DF-L1-F	LEVEL 1 - AREA F - DRYSIDE HVAC SYSTEM LAYOUT
694	DF-L1-G	LEVEL 1 - AREA G - DRYSIDE HVAC SYSTEM LAYOUT
695	M-JD-LR-D	ROOF MECH PIPING DRAWING - JDF
696	M-JD-LR-E	ROOF MECH PIPING DRAWING - JDF
697	M-JD-LR-F	ROOF MECH PIPING DRAWING - JDF
698	DF-MEZZ-D	MEZZANINE AREA D - DRYSIDE HVAC SYSTEM LAYOUT
699	DF-MEZZ-F	MEZZANINE AREA F - DRYSIDE HVAC SYSTEM LAYOUT
700	DF-MEZZ-G	MEZZANINE AREA G - DRYSIDE HVAC SYSTEM LAYOUT
701	DF-ROOF-A	ROOF AREA A - DRYSIDE HVAC SYSTEM LAYOUT
702	M-JD-LU-A	1ST FLOOR MECH PIPING DRAWING - JDF
703	DF-ROOF-B	ROOF AREA B - DRYSIDE HVAC SYSTEM LAYOUT
704	DF-ROOF-	ROOF AREA C - DRYSIDE HVAC SYSTEM LAYOUT
705	M-JD-LU-B	1ST FLOOR MECH PIPING DRAWING - JDF
706	M-JD-LU-C	1ST FLOOR MECH PIPING DRAWING - JDF
707	DF-ROOF-	ROOF AREA D - DRYSIDE HVAC SYSTEM LAYOUT
708	DF-ROOF-E	ROOF AREA E - DRYSIDE HVAC SYSTEM LAYOUT
709	DF-ROOF-F	ROOF AREA F - DRYSIDE HVAC SYSTEM LAYOUT
710	DF-ROOF-	ROOF AREA G - DRYSIDE HVAC SYSTEM LAYOUT
711	M-JD-LU-D	1ST FLOOR MECH PIPING DRAWING - JDF
712	M-JD-LU-E	1ST FLOOR MECH PIPING DRAWING - JDF
713	M-JD-LU-F	1ST FLOOR MECH PIPING DRAWING - JDF
714	FP27	JDF - LEVEL 1 G
715	FP28	JDF - LEVEL 1 H
716	FP29	JDF - LEVEL 1 I
717	FP30	JDF - LEVEL 1 J
718	FP31	JDF - LEVEL 1 K
719	FP32	JDF - LEVEL 1 L
720	FP33	JDF - LEVEL 1 M
721	FP34	JDF - MEZZANINE L
722	FP35	JDF - MEZZANINE K, M
723	SH-522-2	1ST FLOOR CEILING/FLOOR PLAN
724	P-CP-L2-A	ROOF FLOOR PLUMBING SHOP DRAWING - CENTRAL PLANT
725	P-CP-L2-B	ROOF FLOOR PLUMBING SHOP DRAWING - CENTRAL PLANT
726	P-CP-L1-B	1ST FLOOR PLUMBING SHOP DRAWING - CENTRAL PLANT
727	M-C413	MECHANICAL SHOP DRAWING
728	P-CP-L1-A	1ST FLOOR PLUMBING SHOP DRAWING - CENTRAL PLANT
729	M-C411	MECHANICAL SHOP DRAWING
730	M-C406	MECHANICAL SHOP DRAWING
731	P-C906	MECHANICAL SHOP DRAWING
732	M-C414	MECHANICAL SHOP DRAWING
733	CP-L1-C	LEVEL 1 AREA C - DRYSIDE HVAC SYSTEM LAYOUT
734	M-C401	MECHANICAL SHOP DRAWING
735	M-C415	MECHANICAL SHOP DRAWING
736	M-C416	CEP EQUIP PADS
737	CP-L1-B	LEVEL 1 AREA B - DRYSIDE HVAC SYSTEM LAYOUT
738	CP-L1-A	LEVEL 1 AREA A - DRYSIDE HVAC SYSTEM LAYOUT
739	M-C403	MECHANICAL SHOP DRAWING
740	M-C402	MECHANICAL SHOP DRAWING
741	M-C409	MECHANICAL SHOP DRAWING
742	M-C405	MECHANICAL SHOP DRAWING
743	M-C408	MECHANICAL SHOP DRAWING
744	M-C407	MECHANICAL SHOP DRAWING
745	M-C408	MECHANICAL SHOP DRAWING
746	M-C404	MECHANICAL SHOP DRAWING
747	M-C410	MECHANICAL SHOP DRAWING
748	FP4	CENTRAL UTILITY PLANT - AREA E
749	FP5	CENTRAL UTILITY PLANT - AREA F
750	FP2	FIRE PUMP PAD DETAILS
751	FA1	FIRE ALARM SYMBOL LEGEND, CONDUCTOR CODES, & NOTES
752	FA2	PARTIAL FIRST FLOOR FIRE ALARM PLAN-1
753	FA3	PARTIAL FIRST FLOOR FIRE ALARM PLAN-2
754	FA4	PARTIAL FIRST FLOOR FIRE ALARM PLAN-3
755	FA5	MEZZANINE FIRE ALARM PLAN
756	FA6	ROOF FIRE ALARM PLAN
757	FA7	FIRE ALARM RISER DIAGRAM
758	FA8	FIRE ALARM RISER DIAGRAM
759	FA9	FIRE ALARM MODULAR WIRING DIAGRAM
760	EC-B103	PARTIAL FIRST FLOOR COMMUNICATIONS PLAN
761	EC-B105	PARTIAL FIRST FLOOR COMMUNICATIONS PLAN
762	EC-B107	PARTIAL FIRST FLOOR COMMUNICATIONS PLAN

REVISION NO.	SYM.	DESCRIPTION	SHT.__ OF__	DATE	APPROVED: PUBLIC WORKS ADMINISTRATOR

LLOYD T. ARAKAKI
LICENSED PROFESSIONAL ARCHITECT
No. 5336
HAWAII, U.S.A.

This work was prepared by me or under my supervision and construction of this project will be under my observation. (Observation of construction as defined in Chapter 16-115, Subchapter 1 Definitions of the Hawaii Administrative Rules, "Professional Engineers, Architects, Surveyors, and Landscape Architects.")

signature 04/30/08 expiration date of the license

NOTE: Contractor to check and verify dimensions at job before proceeding with work

DEPT. OF ACCOUNTING & GENERAL SERVICES
DIVISION OF PUBLIC WORKS
STATE OF HAWAII

KAPOLEI JUDICIARY COMPLEX
KAPOLEI, OAHU, HAWAII

VOLUME 1
DRAWING INDEX

ARCHITECTS HAWAII, LTD.

DESIGNED BY: DB	CHECKED BY: MK	DACS JOB NO. 12-21-7043	DRAWING NO. G-014
DRAWN BY: AHL	APPROVED BY: —	DATE NOV 2006	SHEET 355 OF 1021 SHTS.
SCALE: AS SHOWN			

FILE ____ DRAW ____ FOLDER ____

FIELD POSTED RECORD DRAWINGS
Certified by Seth Marushige Date January 29, 2013
Unlimited Construction Services, Inc

INDEX TO DRAWINGS

VOLUME 2 - COURT COMPLEX

SHT NO	DWG NUMBER	DESCRIPTION
		VOLUME 2
763	G-011	TITLE SHEET VOLUME 2
764	G-012	VOLUME 1 DRAWING INDEX
765	G-013	VOLUME 1 DRAWING INDEX
766	G-014	VOLUME 2 DRAWING INDEX
767	G-015	VOLUME 2 DRAWING INDEX
768	G-016	VOLUME 2 DRAWING INDEX
769	G-017	VOLUME 3 DRAWING INDEX
770	G-018	VOLUME 3 DRAWING INDEX
		PLUMBING
771	P-A001	LEGEND AND ABBREVIATIONS AND PLUMBING NOTES
772	P-A002	PLUMBING FIXTURE COUNT TABLE
773	P-A101	PLUMBING KEY PLAN
774	P-A102	OVERALL PLUMBING KEY PLAN
775	P-A103	LOW ROOF PLUMBING PLAN
776	P-A104	HIGH ROOF PLUMBING PLAN
777	P-A401	PARTIAL BASEMENT FLOOR PLUMBING PLAN
778	P-A402	PARTIAL BASEMENT FLOOR PLUMBING PLAN
779	P-A403	PARTIAL BASEMENT FLOOR PLUMBING PLAN
780	P-A404	PARTIAL BASEMENT FLOOR PLUMBING PLAN
781	P-A405	PARTIAL BASEMENT FLOOR PLUMBING PLAN
782	P-A406	PARTIAL 1ST FLOOR PLUMBING PLAN
783	P-A407	PARTIAL 1ST FLOOR PLUMBING PLAN
784	P-A408	PARTIAL 1ST FLOOR PLUMBING PLAN
785	P-A409	PARTIAL 1ST FLOOR PLUMBING PLAN
786	P-A410	PARTIAL 1ST FLOOR PLUMBING PLAN
787	P-A411	PARTIAL 1ST FLOOR PLUMBING PLAN
788	P-A412	PARTIAL 1ST FLOOR PLUMBING PLAN
789	P-A413	PARTIAL 1ST FLOOR PLUMBING PLAN
790	P-A414	PARTIAL 2ND FLOOR PLUMBING PLAN
791	P-A415	PARTIAL 2ND FLOOR PLUMBING PLAN
792	P-A416	PARTIAL 2ND FLOOR PLUMBING PLAN
793	P-A417	PARTIAL 2ND FLOOR PLUMBING PLAN
794	P-A418	PARTIAL 2ND FLOOR PLUMBING PLAN
795	P-A419	PARTIAL 2ND FLOOR PLUMBING PLAN
796	P-A420	PARTIAL 2ND FLOOR PLUMBING PLAN
797	P-A421	PARTIAL 2ND FLOOR PLUMBING PLAN
798	P-A422	PARTIAL 3RD FLOOR PLUMBING PLAN
799	P-A423	PARTIAL 3RD FLOOR PLUMBING PLAN
800	P-A424	PARTIAL 3RD FLOOR PLUMBING PLAN
801	P-A425	PARTIAL 3RD FLOOR PLUMBING PLAN
802	P-A426	PARTIAL 3RD FLOOR PLUMBING PLAN
803	P-A427	PARTIAL 3RD FLOOR PLUMBING PLAN
804	P-A428	PARTIAL 3RD FLOOR PLUMBING PLAN
805	P-A429	PARTIAL 3RD FLOOR PLUMBING PLAN
806	P-A430	PARTIAL 4TH FLOOR PLUMBING PLAN
807	P-A431	PARTIAL 4TH FLOOR PLUMBING PLAN
808	P-A432	PARTIAL 4TH FLOOR PLUMBING PLAN
809	P-A433	PARTIAL 4TH FLOOR PLUMBING PLAN
810	P-A434	PARTIAL 4TH FLOOR PLUMBING PLAN
811	P-A435	PARTIAL 4TH FLOOR PLUMBING PLAN
812	P-A436	PARTIAL 4TH FLOOR PLUMBING PLAN
813	P-A437	PARTIAL 4TH FLOOR PLUMBING PLAN
814	P-A438	ALTERNATE A-1 PARTIAL 1ST FLOOR PLUMBING PLAN
815	P-A439	ALTERNATE A-1 PARTIAL 1ST FLOOR PLUMBING PLAN
816	P-A440	ALTERNATE A-1 PARTIAL 1ST FLOOR PLUMBING PLAN
817	P-A441	ALTERNATE A-2 PARTIAL 3RD FLOOR PLUMBING PLAN
818	P-A501	DETAILS
819	P-A502	DETAILS
820	P-A503	DETAILS
821	P-A601	SANITARY RISER SCHEMATIC DIAGRAM
822	P-A602	DOMESTIC WATER RISER SCHEMATIC DIAGRAM
823	P-A603	CONTROL DIAGRAMS
824	P-A604	ALTERNATE A-1 CONTROL DIAGRAMS
825	P-A605	EQUIPMENT SCHEDULE
826	P-A606	ALTERNATE A-1 EQUIPMENT SCHEDULE
827	P-A607	ALTERNATE A-2 EQUIPMENT SCHEDULE

SHT NO	DWG NUMBER	DESCRIPTION
828	P-A901	PARTIAL BASEMENT SANITARY PIPING DIAGRAM
829	P-A902	PARTIAL BASEMENT SANITARY PIPING DIAGRAM
830	P-A903	PARTIAL 1ST FLOOR SANITARY PIPING DIAGRAM
831	P-A904	PARTIAL 1ST FLOOR SANITARY PIPING DIAGRAM
832	P-A905	PARTIAL 2ND FLOOR SANITARY PIPING DIAGRAM
833	P-A906	PARTIAL 2ND FLOOR SANITARY PIPING DIAGRAM
834	P-A907	PARTIAL 3RD FLOOR SANITARY PIPING DIAGRAM
835	P-A908	PARTIAL 3RD FLOOR SANITARY PIPING DIAGRAM
836	P-A909	PARTIAL 4TH FLOOR SANITARY PIPING DIAGRAM
837	P-A910	PARTIAL 4TH FLOOR SANITARY PIPING DIAGRAM
838	P-A911	PARTIAL 1ST FLOOR WATER PIPING DIAGRAM
839	P-A912	PARTIAL 1ST FLOOR WATER PIPING DIAGRAM
840	P-A913	PARTIAL 2ND FLOOR WATER PIPING DIAGRAM
841	P-A914	PARTIAL 2ND FLOOR WATER PIPING DIAGRAM
842	P-A915	PARTIAL 3RD FLOOR WATER PIPING DIAGRAM
843	P-A916	PARTIAL 3RD FLOOR WATER PIPING DIAGRAM
844	P-A917	PARTIAL 4TH FLOOR WATER PIPING DIAGRAM
845	P-A918	PARTIAL 4TH FLOOR WATER PIPING DIAGRAM
846	P-A919	1ST FLOOR STORM DRAIN PIPING DIAGRAM
847	P-A920	1ST FLOOR STORM DRAIN PIPING DIAGRAM
848	P-A921	2ND FLOOR STORM DRAIN PIPING DIAGRAM
849	P-A922	2ND FLOOR STORM DRAIN PIPING DIAGRAM
850	P-A923	3RD FLOOR STORM DRAIN PIPING DIAGRAM
851	P-A924	3RD FLOOR STORM DRAIN PIPING DIAGRAM
852	P-A925	4TH FLOOR STORM DRAIN PIPING DIAGRAM
853	P-A926	4TH FLOOR STORM DRAIN PIPING DIAGRAM
	P-A927	NOT USED
854	P-A928	HIGH ROOF STORM DRAIN PIPING DIAGRAM
855	P-A929	ALTERNATE A-1: PARTIAL 1ST FLOOR SANITARY PIPING DIAGRAM
856	P-A930	ALTERNATE A-1: PARTIAL 1ST FLOOR SANITARY PIPING DIAGRAM
857	P-A931	ALTERNATE A-1: PARTIAL 1ST FLOOR WATER PIPING DIAGRAM
858	P-A932	ALTERNATE A-1: PARTIAL 1ST FLOOR WATER PIPING DIAGRAM
859	P-A933	ALTERNATE A-2: PARTIAL 3RD FLOOR SANITARY PIPING DIAGRAM
860	P-A934	ALTERNATE A-2: PARTIAL 3RD FLOOR WATER PIPING DIAGRAM
		MECHANICAL
861	M-A001	LEGENDS AND ABBREVIATIONS, MECHANICAL NOTES
862	M-A002	MECHANICAL SITE PLAN
863	M-A101	MECHANICAL KEY PLAN
864	M-A102	PARTIAL ROOF MECHANICAL PLAN
865	M-A301	SECTIONS
866	M-A302	SECTIONS
867	M-A303	SECTIONS
868	M-A304	SECTIONS
869	M-A305	SECTIONS
870	M-A306	SECTIONS
871	M-A307	SECTIONS
872	M-A308	SECTIONS
873	M-A309	ALTERNATE A-1: SECTIONS
874	M-A310	ALTERNATE A-2: SECTIONS
875	M-A311	ALTERNATE A-2: SECTIONS
876	M-A312	ALTERNATE A-2: SECTIONS
877	M-A401	PARTIAL BASEMENT FLOOR MECHANICAL PLAN
878	M-A402	PARTIAL BASEMENT FLOOR MECHANICAL PLAN
879	M-A403	PARTIAL BASEMENT FLOOR MECHANICAL PLAN
880	M-A404	PARTIAL BASEMENT FLOOR MECHANICAL PLAN
881	M-A405	PARTIAL BASEMENT FLOOR MECHANICAL PLAN
882	M-A406	PARTIAL BASEMENT FLOOR MECHANICAL PLAN
883	M-A407	PARTIAL 1ST FLOOR MECHANICAL PLAN
884	M-A408	PARTIAL 1ST FLOOR MECHANICAL PLAN
885	M-A409	PARTIAL 1ST FLOOR MECHANICAL PLAN
886	M-A410	PARTIAL 1ST FLOOR MECHANICAL PLAN
887	M-A411	PARTIAL 1ST FLOOR MECHANICAL PLAN
888	M-A412	PARTIAL 1ST FLOOR MECHANICAL PLAN
889	M-A413	PARTIAL 1ST FLOOR MECHANICAL PLAN
890	M-A414	PARTIAL 1ST FLOOR MECHANICAL PLAN
891	M-A415	PARTIAL 2ND FLOOR MECHANICAL PLAN
892	M-A416	PARTIAL 2ND FLOOR MECHANICAL PLAN

SHT NO	DWG NUMBER	DESCRIPTION
893	M-A417	PARTIAL 2ND FLOOR MECHANICAL PLAN
894	M-A418	PARTIAL 2ND FLOOR MECHANICAL PLAN
895	M-A419	PARTIAL 2ND FLOOR MECHANICAL PLAN
896	M-A420	PARTIAL 2ND FLOOR MECHANICAL PLAN
897	M-A421	PARTIAL 2ND FLOOR MECHANICAL PLAN
898	M-A422	PARTIAL 2ND FLOOR MECHANICAL PLAN
899	M-A423	PARTIAL 3RD FLOOR MECHANICAL PLAN
900	M-A424	PARTIAL 3RD FLOOR MECHANICAL PLAN
901	M-A425	PARTIAL 3RD FLOOR MECHANICAL PLAN
902	M-A426	PARTIAL 3RD FLOOR MECHANICAL PLAN
903	M-A427	PARTIAL 3RD FLOOR MECHANICAL PLAN
904	M-A428	PARTIAL 3RD FLOOR MECHANICAL PLAN
905	M-A429	PARTIAL 3RD FLOOR MECHANICAL PLAN
906	M-A430	PARTIAL 3RD FLOOR MECHANICAL PLAN
907	M-A431	PARTIAL 4TH FLOOR MECHANICAL PLAN
908	M-A432	PARTIAL 4TH FLOOR MECHANICAL PLAN
909	M-A433	PARTIAL 4TH FLOOR MECHANICAL PLAN
910	M-A434	PARTIAL 4TH FLOOR MECHANICAL PLAN
911	M-A435	PARTIAL 4TH FLOOR MECHANICAL PLAN
912	M-A436	PARTIAL 4TH FLOOR MECHANICAL PLAN
913	M-A437	PARTIAL 1ST FLOOR REHEAT AND CHILLED WATER PLAN
914	M-A438	PARTIAL 1ST FLOOR REHEAT AND CHILLED WATER PLAN
915	M-A439	PARTIAL 1ST FLOOR REHEAT AND CHILLED WATER PLAN
916	M-A440	PARTIAL 1ST FLOOR REHEAT AND CHILLED WATER PLAN
917	M-A441	PARTIAL 1ST FLOOR REHEAT AND CHILLED WATER PLAN
918	M-A442	PARTIAL 1ST FLOOR REHEAT AND CHILLED WATER PLAN
919	M-A443	PARTIAL 1ST FLOOR REHEAT AND CHILLED WATER PLAN
920	M-A444	PARTIAL 2ND FLOOR REHEAT AND CHILLED WATER PLAN
921	M-A445	PARTIAL 2ND FLOOR REHEAT AND CHILLED WATER PLAN
922	M-A446	PARTIAL 2ND FLOOR REHEAT AND CHILLED WATER PLAN
923	M-A447	PARTIAL 2ND FLOOR REHEAT AND CHILLED WATER PLAN
924	M-A448	PARTIAL 2ND FLOOR REHEAT AND CHILLED WATER PLAN
925	M-A449	PARTIAL 3RD FLOOR REHEAT AND CHILLED WATER PLAN
926	M-A450	PARTIAL 3RD FLOOR REHEAT AND CHILLED WATER PLAN
927	M-A451	PARTIAL 3RD FLOOR REHEAT AND CHILLED WATER PLAN
928	M-A452	PARTIAL 3RD FLOOR REHEAT AND CHILLED WATER PLAN
929	M-A453	PARTIAL 4TH FLOOR REHEAT AND CHILLED WATER PLAN
930	M-A454	PARTIAL 4TH FLOOR REHEAT AND CHILLED WATER PLAN
931	M-A455	PARTIAL 4TH FLOOR REHEAT AND CHILLED WATER PLAN
932	M-A456	PARTIAL 4TH FLOOR REHEAT AND CHILLED WATER PLAN
933	M-A457	PARTIAL 4TH FLOOR REHEAT AND CHILLED WATER PLAN
934	M-A458	ALTERNATE A-1. PARTIAL 1ST FLOOR MECHANICAL PLAN
935	M-A459	ALTERNATE A-1· PARTIAL 1ST FLOOR MECHANICAL PLAN
936	M-A460	ALTERNATE A-1 PARTIAL 1ST FLOOR MECHANICAL PLAN
937	M-A461	ALTERNATE A-1 PARTIAL 1ST FLOOR MECHANICAL PLAN
938	M-A462	ALTERNATE A-1 PARTIAL 1ST FLOOR REHEAT AND CHILLED WATER PLAN
939	M-A463	ALTERNATE A-2· PARTIAL 1ST FLOOR MECHANICAL PLAN
940	M-A464	ALTERNATE A-2 PARTIAL 1ST FLOOR MECHANICAL PLAN
941	M-A465	ALTERNATE A-2. PARTIAL 1ST FLOOR MECHANICAL PLAN
942	M-A466	ALTERNATE A-2. PARTIAL 2ND FLOOR MECHANICAL PLAN
943	M-A467	ALTERNATE A-2 PARTIAL 2ND FLOOR MECHANICAL PLAN
944	M-A468	ALTERNATE A-2. PARTIAL 3RD FLOOR MECHANICAL PLAN
945	M-A469	ALTERNATE A-2: PARTIAL 3RD FLOOR MECHANICAL PLAN
946	M-A470	ALTERNATE A-2 PARTIAL 3RD FLOOR MECHANICAL PLAN
947	M-A471	ALTERNATE A-2. PARTIAL 3RD FLOOR MECHANICAL PLAN
948	M-A472	ALTERNATE A-2 PARTIAL 3RD FLOOR MECHANICAL PLAN
949	M-A473	ALTERNATE A-2. PARTIAL 4TH FLOOR MECHANICAL PLAN
950	M-A474	ALTERNATE A-2· PARTIAL 2ND FLOOR REHEAT AND CHILLED WATER
951	M-A475	ALTERNATE A-3. PARTIAL BASEMENT FLOOR MECHANICAL PLAN
952	M-A476	ADDITIVE ALTERNATE A-3 PARTIAL BASEMENT FLOOR MECHANICAL PLAN
953	M-A477	ADDITIVE ALTERNATE A-3 PARTIAL 1ST FLOOR MECHANICAL PLAN
954	M-A478	ALTERNATE A-3. PARTIAL 1ST FLOOR MECHANICAL PLAN
955	M-A479	ALTERNATE A-3 PARTIAL 1ST FLOOR MECHANICAL PLAN
956	M-A480	ALTERNATE A-3 PARTIAL 2ND FLOOR MECHANICAL PLAN
957	M-A481	ALTERNATE A-3: PARTIAL 2ND FLOOR MECHANICAL PLAN
958	M-A482	ALTERNATE A-3 PARTIAL 3RED FLOOR MECHANICAL PLAN
959	M-A483	ALTERNATE A-3: PARTIAL 3RD FLOOR MECHANICAL PLAN
960	M-A484	ADDITIVE ALTERNATE A-3 PARTIAL 4TH FLOOR MECHANICAL PLAN
961	M-A485	ADDITIVE ALTERNATE A-3 PARTIAL 4TH FLOOR MECHANICAL PLAN
962	M-A486	ADDITIVE ALTERNATE A-3 PARTIAL 4TH FLOOR MECHANICAL PLAN
963	M-A487	ADDITIVE ALTERNATE A-3 PARTIAL 4TH FLOOR MECHANICAL PLAN

SHT NO	DWG NUMBER	DESCRIPTION
964	M-A488	ADDITIVE ALTERNATE A-3 PARTIAL ROOF MECHANICAL PLAN
965	M-A489	ADDITIVE ALTERNATE A-3 PARTIAL ROOF MECHANICAL PLAN
966	M-A501	DETAILS - ROOF MOUNTED EQUIPMENT
967	M-A502	DETAILS
968	M-A503	DETAILS
969	M-A601	AIR SIDE VAV W/ RELIEF FAN SYSTEM SCHEMATIC DIAGRAM
970	M-A602	SEQUENCE OF OPERATION
971	M-A603	AIRSIDE VAV SYSTEM SCHEMATIC DIAGRAM
972	M-A604	AIRSIDE VAV SYSTEM SCHEMATIC DIAGRAM
973	M-A605	AIRSIDE CONSTANT VOLUME SYSTEM SCHEMATIC DIAGRAM
974	M-A606	AIRSIDE FCU SYSTEM SCHEMATIC DIAGRAM
975	M-A607	DIRECT EXPANSION SPLIT SYSTEM SCHEMATIC DIAGRAM
976	M-A608	DDC SYSTEM RISER DIAGRAM
977	M-A609	DDC SYSTEM POINTS LIST
978	M-A610	DDC SYSTEM POINTS LIST
979	M-A611	DDC SYSTEM POINTS LIST
980	M-A612	CONTROL DIAGRAMS
981	M-A613	EQUIPMENT SCHEDULE
982	M-A614	EQUIPMENT SCHEDULES
983	M-A615	EQUIPMENT SCHEDULE
984	M-A616	EQUIPMENT SCHEDULES
985	M-A617	EQUIPMENT SCHEDULES
986	M-A618	ALTERNATE A-1: EQUIPMENT SCHEDULES
987	M-A619	ALTERNATE A-2: AIRSIDE VAV W/ RELIEF FAN SYSTEM SCHEMATIC
988	M-A620	ALTERNATE A-2: SEQUENCE OF OPERATION
989	M-A621	ALTERNATE A-2· AIRSIDE FCU SYSTEM SCHEMATIC DIAGRAM
	M-A622	NOT USED
990	M-A623	ALTERNATE A-2· DIRECT EXPANSION SPLIT SYSTEM SCHEMATIC DIAGRAM
991	M-A624	ALTERNATE A-2: CONTROL DIAGRAMS
992	M-A625	ALTERNATE A-2: EQUIPMENT SCHEDULES
993	M-A626	ALTERNATE A-3. AIRSIDE VAV W/ RELIEF FAN SYSTEM SCHEMATIC
994	M-A627	SEQUENCE OF OPERATION
995	M-A628	ALTERNATE A-3 AIRSIDE VAV SYSTEM SCHEMATIC DIAGRAM
996	M-A629	AIRSIDE VAV SYSTEM SCHEMATIC DIAGRAM
997	M-A630	ALTERNATE A-3 AIRSIDE FCU SYSTEM SCHEMATIC DIAGRAM
998	M-A631	ALTERNATE A-3 DIRECT EXPANSION SPLIT SYSTEM SCHEMATIC DIAGRAM
999	M-A632	ALTERNATE A-3 DIRECT EXPANSION SPLIT SYSTEM SCHEMATIC DIAGRAM
1000	M-A633	ALTERNATE A-3 DIRECT EXPANSION SPLIT SYSTEM SCHEMATIC DIAGRAM
1001	M-A634	ALTERNATE A-3 DIRECT EXPANSION SPLIT SYSTEM SCHEMATIC DIAGRAM
1002	M-A901	PARTIAL BASEMENT CHILLED AND REHEAT WATER DIAGRAM
1003	M-A902	PARTIAL BASEMENT CHILLED AND REHEAT WATER PIPING DIAGRAM
1004	M-A903	PARTIAL 1ST FLOOR CHILLED AND REHEAT WATER PIPING DIAGRAM
1005	M-A904	PARTIAL 1ST FLOOR CHILLED AND REHEAT WATER PIPING DIAGRAM
1006	M-A905	PARTIAL 2ND FLOOR CHILLED AND REHEAT WATER PIPING DIAGRAM
1007	M-A906	PARTIAL 2ND FLOOR CHILLED AND REHEAT WATER PIPING DIAGRAM
1008	M-A907	PARTIAL 3RD FLOOR CHILLED AND REHEAT WATER PIPING DIAGRAM
1009	M-A908	PARTIAL 3RD FLOOR CHILLED AND REHEAT WATER PIPING DIAGRAM
1010	M-A909	PARTIAL 4TH FLOOR CHILLED AND REHEAT WATER PIPING DIAGRAM

REVISION NO.	SYM.	DESCRIPTION	SHT.__ OF__	DATE	APPROVED: PUBLIC WORKS ADMINISTRATOR

DEPT. OF ACCOUNTING & GENERAL SERVICES
DIVISION OF PUBLIC WORKS
STATE OF HAWAII

KAPOLEI JUDICIARY COMPLEX
KAPOLEI, OAHU, HAWAII

VOLUME 2
DRAWING INDEX

ARCHITECTS HAWAII, LTD.

LLOYD T. ARAKAKI
LICENSED PROFESSIONAL ARCHITECT
No. 5336
HAWAII, U.S.A.

This work was prepared by me or under my supervision and construction of this project will be under my observation. (Observation of construction as defined in Chapter 16-115, Subchapter 1 Definitions of the Hawaii Administrative Rules, Professional Engineers, Architects, Surveyors, and Landscape Architects.)

signature 04/30/08 expiration date of the license

NOTE: Contractor to check and verify dimensions at job before proceeding with work.

DESIGNED BY: DB	CHECKED BY: MK	DAGS JOB NO. 12-21-7043	DRAWING NO. G-015
DRAWN BY: AHL	APPROVED BY: -	DATE NOV 2006	SHEET 356 OF 1021 SHTS.
SCALE: AS SHOWN			

FILE ____ DRAW ____ FOLDER ____

DATE: 01/04/06

FIELD POSTED RECORD DRAWINGS Certified by: Seth Marushige Date: January 29, 2013
Unlimited Construction Services, Inc.

INDEX TO DRAWINGS

VOLUME 2 - COURT COMPLEX

SHT NO	DWG NUMBER	DESCRIPTION
1011	M-A910	PARTIAL 4TH FLOOR CHILLED AND REHEAT WATER PIPING DIAGRAM
1012	M-A911	PARTIAL ROOF CHILLED AND REHEAT WATER PIPING DIAGRAM
1013	M-A912	REFRIGERANT PIPING DIAGRAM
1014	M-A913	ALTERNATE A-1: PARTIAL 1ST FLOOR CHILLED AND REHEAT WATER
1015	M-A914	ALTERNATE A-1: PARTIAL 1ST FLOOR CHILLED AND REHEAT WATER
1016	M-A915	ALTERNATE A-2: PARTIAL 3RD FLOOR CHILLED & REHEAT WATER PIPING
		ELECTRICAL
1017	E-A001	ELECTRICAL SYMBOL LIST
1018	E-A002	ELECTRICAL SITE PLAN
1019	E-A003	SITE LIGHTING PLAN
1020	E-A004	DUCT AND HANDHOLD DETAILS
1021	E-A005	SITE LIGHTING DETAILS
1022	E-A006	SITE ELECTRICAL DETAILS
1023	E-A101	PARTIAL BASEMENT POWER & OUTLETS PLAN - 1
1024	E-A102	PARTIAL BASEMENT POWER & OUTLETS PLAN - 2
1025	E-A103	PARTIAL 1ST FLOOR POWER & OUTLETS PLAN-1
1026	E-A104	PARTIAL 1ST FLOOR POWER & OUTLETS PLAN-2
1027	E-A105	PARTIAL 2ND FLOOR POWER & OUTLETS PLAN-1
1028	E-A106	PARTIAL 2ND FLOOR POWER & OUTLETS PLAN-2
1029	E-A107	PARTIAL 3RD FLOOR POWER & OUTLETS PLAN-1
1030	E-A108	PARTIAL 3RD FLOOR POWER & OUTLETS PLAN-2
1031	E-A109	PARTIAL 4TH FLOOR POWER & OUTLETS PLAN-1
1032	E-A110	PARTIAL 4TH FLOOR POWER & OUTLETS PLAN-2
1033	E-A111	PARTIAL ROOF ELECTRICAL PLAN
1034	E-A201	PARTIAL BASEMENT SIGNAL PLAN-1
1035	E-A202	PARTIAL BASEMENT SIGNAL PLAN-2
1036	E-A203	PARTIAL 1ST FLOOR SIGNAL PLAN-1
1037	E-A204	PARTIAL 1ST FLOOR SIGNAL PLAN-2
1038	E-A205	PARTIAL 2ND FLOOR SIGNAL PLAN-1
1039	E-A206	PARTIAL 2ND FLOOR SIGNAL PLAN-2
1040	E-A207	PARTIAL 3RD FLOOR SIGNAL PLAN-1
1041	E-A208	PARTIAL 3RD FLOOR SIGNAL PLAN-2
1042	E-A209	PARTIAL 4TH FLOOR SIGNAL PLAN-1
1043	E-A210	PARTIAL 4TH FLOOR SIGNAL PLAN-2
1044	E-A211	PARTIAL ROOF SIGNAL PLAN
1045	E-A301	PARTIAL BASEMENT LIGHTING PLAN - 1
1046	E-A302	PARTIAL BASEMENT LIGHTING PLAN - 2
1047	E-A303	PARTIAL 1ST FLOOR LIGHTING PLAN - 1
1048	E-A304	PARTIAL 1ST FLOOR LIGHTING PLAN - 2
1049	E-A305	PARTIAL 2ND FLOOR LIGHTING PLAN - 1
1050	E-A306	PARTIAL 2ND FLOOR LIGHTING PLAN - 2
1051	E-A307	PARTIAL 3RD FLOOR LIGHTING PLAN - 1
1052	E-A308	PARTIAL 3RD FLOOR LIGHTING PLAN - 2
1053	E-A309	PARTIAL 4TH FLOOR LIGHTING PLAN - 1
1054	E-A310	PARTIAL 4TH FLOOR LIGHTING PLAN - 2
1055	E-A401	ELECTRIC ROOM DETAIL PLANS
1056	E-A402	COMM ROOM DETAIL PLANS
1057	E-A403	SUPER SIZE COURTROOM AND HOLDING CELLS ELECTRICAL PLANS
1058	E-A404	3RD FLOOR COURTROOMS ELECTRICAL PLANS
1059	E-A501	MISCELLANEOUS ELECTRICAL DETAILS
1060	E-A601	PARTIAL ONE LINE DIAGRAM 1
1061	E-A602	PARTIAL ONE LINE DIAGRAM 2
1062	E-A603	TELEPHONE AND CATV SERVICE DISTRIBUTION DIAGRAMS
1063	E-A604	PARTIAL FIRE ALARM RISER DIAGRAM -1
1064	E-A605	PARTIAL FIRE ALARM RISER DIAGRAM -2
1065	E-A606	PARTIAL FIRE ALARM RISER DIAGRAM -3
1066	E-A607	FIRE ALARM SEQUENCE OF OPERATIONS MATRIX
1067	E-A608	LIGHTING CONTROL DIAGRAMS
1068	E-A701	LUMINAIRE SCHEDULE
1069	E-A702	PANEL SCHEDULES
1070	E-A703	PANEL SCHEDULES
1071	E-A704	PANEL SCHEDULES
1072	E-A705	PANEL SCHEDULES
1073	E-A706	PANEL SCHEDULES

SHT NO	DWG NUMBER	DESCRIPTION
		FIRE PROTECTION
1074	FP-A001	FIRE PROTECTION NOTES AND SYMBOLS
1075	FP-A101	BASEMENT FIRE PROTECTION PLAN
1076	FP-A102	FIRST FLOOR FIRE PROTECTION PLAN
1077	FP-A103	SECOND FLOOR FIRE PROTECTION PLAN
1078	FP-A104	THIRD FLOOR FIRE PROTECTION PLAN
1079	FP-A105	FOURTH FLOOR FIRE PROTECTION PLAN
1080	FP-A106	ROOF FIRE PROTECTION PLAN
1081	FP-A401	ADD ALTERNATE A-1: SPRINKLER LAYOUT FOR THE FIRST FLOOR SUPER SIZE COURTROOM
1082	FP-A402	TYPICAL NON-JURY COURTROOM SPRINKLER LAYOUTS
1083	FP-A403	ADD ALTERNATE A-2: FM-200 PROTECTION PLANS FOR THE FIRST AND SECOND FLOORS
1084	FP-A404	ADD ALTERNATE A-2: FM-200 PROTECTION PLANS FOR THE THIRD AND FOURTH FLOORS
1085	FP-A501	SEQUENCE OF OPERATION AND FM-200 DETAILS
1086	FP-A502	FIRE PROTECTION DETAILS
1087	FP-A503	RISER DIAGRAMS
		COMMUNICATION
1088	EC-001	COMMUNICATIONS SYMBOL, LEGEND & NOTES
1089	EC-A113	PARTIAL BASEMENT FLOOR COMMUNICATIONS PLAN
1090	EC-A114	PARTIAL BASEMENT FLOOR COMMUNICATIONS PLAN
1091	EC-A116	PARTIAL 1ST FLOOR COMMUNICATIONS PLAN
1092	EC-A117	SUPERSIZE JURY COURTROOM ENLARGED PLAN
1093	EC-A118	PARTIAL 1ST FLOOR COMMUNICATIONS PLAN
1094	EC-A120	PARTIAL 2ND FLOOR COMMUNICATIONS PLAN
1095	EC-A122	PARTIAL 2ND FLOOR COMMUNICATIONS PLAN
1096	EC-A124	PARTIAL 3RD FLOOR COMMUNICATIONS PLAN
1097	EC-A125	ENLARGED PARTIAL 3RD FLOOR PLAN
1098	EC-A126	PARTIAL 3RD FLOOR COMMUNICATIONS PLAN
1099	EC-A128	PARTIAL 4TH FLOOR COMMUNICATIONS PLAN
1100	EC-A130	PARTIAL 4TH FLOOR COMMUNICATIONS PLAN
1101	EC-A132	PARTIAL ROOF COMMUNICATIONS PLAN
1102	EC-301	COMMUNICATIONS ROOM ENLARGED PLANS
1103	EC-302	COMMUNICATIONS ROOM ENLARGED PLANS
1104	EC-303	TYPICAL NON-JURY COURTROOM COURT A/V RECORDING SYSTEM
1105	EC-304	LARGE NON-JURY COURTROOM COURT A/V RECORDING SYSTEM
1106	EC-305	PART SECOND FLR PLAN-COURTRM SOUND SYS (ELEC ROUGH-IN)
1107	EC-306	ADD ALTERNATE - SS JURY COURTRM, COURT A/V RECORDING SYS
1108	EC-401	STRUCTURED COPPER/FIBER OPTIC SYSTEM DIAGRAM
1109	EC-402	CATV SYSTEM DIAGRAMS
1110	EC-403	COURT A/V NETWORK SYSTEM DIAGRAMS
1111	EC-404	COURTRM SOUND SYS W/ COURT RECORDING & VIDEO ARRAIGNMENT
1112	EC-405	AV SYSTEM ONE-LINE DIAGRAMS
1113	EC-406	COURTROOM SOUND SYSTEM WITH COURT RECORDING & VIDEO ARRAIGNMENT SYSTEM
1114	EC-407	AV SYSTEM ONE-LINE DIAGRAMS
1115	EC-501	COMMUNICATIONS ROOM RISER DIAGRAM
1116	EC-502	COURT AV RECORDING CONDUIT RISER DIAGRAM
1117	EC-503	RADIO ROUGH-IN CONDUIT RISER DIAGRAM
1118	EC-601	COMMUNICATIONS RACK ELEVATIONS
1119	EC-602	COMMUNICATIONS RACK ELEVATIONS
1120	EC-603	COMMUNICATIONS RACK ELEVATIONS
		SECURITY
1121	ES-001	SECURITY SYMBOLS, LEGENDS & NOTES
1122	ES-002	SECURITY SITE PLAN
1123	ES-301	CCTV SYSTEM DIAGRAM VIDEO SURVEILLANCE
1124	ES-302	SYSTEM DIAGRAMS PLC/CONTROL ELECTRONICS
1125	ES-303	SYSTEM DIAGRAMS INTERCOM & DOOR CONTROL
1126	ES-304	INTERCOM SYSTEM DIAGRAM
1127	ES-305	SYSTEM DIAGRAM JDF RISER
1128	ES-306	SYSTEM DIAGRAM COURTS RISER
1129	ES-307	ACCESS CONTROL SYSTEM DIAGRAMS
1130	ES-311	SYSTEM DETAILS, VIDEO SURVEILLANCE
1131	ES-312	SYSTEM MOUNTING DETAILS
1132	ES-313	SYSTEM MOUNTING DETAILS
1133	ES-314	SYSTEM MOUNTING DETAILS
1134	ES-315	CAMERA MOUNTING DETAILS
1135	ES-501	TOUCHSCREEN DETAILS
1136	ES-502	TOUCHSCREEN DETAILS
1137	ES-503	TOUCHSCREEN DETAILS
1138	ES-504	TOUCHSCREEN DETAILS
1139	ES-505	TOUCHSCREEN DETAILS
1140	ES-506	TOUCHSCREEN DETAILS
1141	ES-507	TOUCHSCREEN DETAILS
1142	ES-508	TOUCHSCREEN DETAILS

SHT NO	DWG NUMBER	DESCRIPTION
1143	ES-509	TOUCHSCREEN DETAILS
1144	ES-510	TOUCHSCREEN DETAILS
1145	ES-601	PAGING ZONES - JUVENILE DETENTION FACILITY
1146	ES-701	ACCESS CONTROL SCREEN LAYOUTS
1147	ES-A111	PARTIAL BASEMENT FLOOR SECURITY PLAN
1148	ES-A112	PARTIAL BASEMENT FLOOR SECURITY PLAN
1149	ES-A113	PARTIAL GROUND FLOOR SECURITY PLAN
1150	ES-A114	PARTIAL GROUND FLOOR SECURITY PLAN
1151	ES-A115	PARTIAL 2ND FLOOR SECURITY PLAN
1152	ES-A116	PARTIAL 2ND FLOOR SECURITY PLAN
1153	ES-A117	PARTIAL 3RD FLOOR SECURITY PLAN
1154	ES-A118	PARTIAL 3RD FLOOR SECURITY PLAN
1155	ES-A119	PARTIAL 4TH FLOOR SECURITY PLAN
1156	ES-A120	PARTIAL 4TH FLOOR SECURITY PLAN
1157	ES-A121	PARTIAL ROOF SECURITY PLAN
1158	ES-A201	BUILDING CONTROL PLANS, ELEVATIONS & DETAILS
1159	ES-A211	SECURITY ELECTRICAL ROOM PLANS, ELEVATIONS & DETAILS
1160	ES-A432	CC SUPERSIZE JURY COURTROOM ENLARGED FLOOR SECURITY PLAN
1161	ES-A434	CC SECURITY HOLDING CELLS FLOOR SECURITY PLAN
1162	ES-A436	CC ENLARGED PARTIAL 3RD FLOOR PLAN

REVISION NO.	SYM.	DESCRIPTION	SHT.___ OF___	DATE	APPROVED: PUBLIC WORKS ADMINISTRATOR

LLOYD T. ARAKAKI
LICENSED PROFESSIONAL ARCHITECT
No. 5336
HAWAII, U.S.A.

This work was prepared by me or under my supervision and construction of this project will be under my observation. (Observation of construction as defined in Chapter 16-115, Subchapter 1 Definitions of the Hawaii Administrative Rules, "Professional Engineers, Architects, Surveyors, and Landscape Architects.")

signature 04/30/08 expiration date of the license

NOTE: Contractor to check and verify dimensions at job before proceeding with work.

DEPT. OF ACCOUNTING & GENERAL SERVICES
DIVISION OF PUBLIC WORKS
STATE OF HAWAII

KAPOLEI JUDICIARY COMPLEX
KAPOLEI, OAHU, HAWAII

VOLUME 2
DRAWING INDEX

ARCHITECTS HAWAII, LTD.		DAGS JOB NO.	DRAWING NO.
DESIGNED BY: DB	CHECKED BY: MK	12-21-7043	G-016
DRAWN BY: AHL	APPROVED BY: --	DATE NOV 2006	SHEET 357 OF 1021 SHTS.
SCALE: AS SHOWN			

FIELD POSTED RECORD DRAWINGS Certified by: Seth Murashige Date: January 29, 2013 Unlimited Construction Services, Inc.

FILE ____ DRAW ____ FOLDER ____

INDEX TO DRAWINGS

VOLUME 3 - JUVENILE DETENTION FACILITY

SHT NO	DWG NUMBER	DESCRIPTION
		VOLUME 3
		JUVENILE DETENTION FACILITY
1163	G-019	TITLE SHEET VOLUME 3
1164	G-020	VOLUME 1 DRAWING INDEX
1165	G-021	VOLUME 1 DRAWING INDEX
1166	G-022	VOLUME 2 DRAWING INDEX
1167	G-023	VOLUME 2 DRAWING INDEX
1168	G-024	VOLUME 2 DRAWING INDEX
1169	G-025	VOLUME 3 DRAWING INDEX
1170	G-026	VOLUME 3 DRAWING INDEX
		STRUCTURAL
1171	S-B101	GROUND FLOOR & FOUNDATION PLAN
1172	S-B102	GROUND FLOOR WALL PLAN
1173	S-B103	MEZZANINE FRAMING PLAN
1174	S-B104	ROOF FRAMING PLAN
1175	S-B105	CONCRETE ROOF BEAM LAYOUT
1176	S-B106	STAIR PLANS
1177	S-B301	WALL SECTIONS
1178	S-B302	WALL SECTIONS
1179	S-B303	WALL SECTIONS
1180	S-B304	WALL SECTIONS
1181	S-B305	WALL SECTIONS
1182	S-B401	TYPICAL SLAB-ON-GRADE DETAILS
1183	S-B402	TYPICAL FOUNDATION DETAILS
1184	S-B501	TYP WALL & COL ELEV, SCHED, & DETAILS
1185	S-B601	TYPICAL BEAM ELEV, SCHED & DETAILS
1186	S-B602	BEAM SCHEDULE
1187	S-B701	TYPICAL STRUCTURAL STEEL SCHEDULES
1188	S-B702	TYPICAL STRUCTURAL STEEL DETAILS
1189	S-B801	TRUSS ELEVATIONS
1190	S-B802	TRUSS CONNECTION DETAILS
		ARCHITECTURAL
1191	A-B101	OVERALL FIRST FLOOR PLAN
1192	A-B102	OVERALL MEZZANINE FLOOR PLAN
1193	A-B103	PARTIAL FIRST FLOOR PLAN
1194	A-B104	PARTIAL FIRST FLOOR DIMENSION PLAN
1195	A-B105	PARTIAL FIRST FLOOR PLAN
1196	A-B106	PARTIAL FIRST FLOOR DIMENSION PLAN
1197	A-B107	PARTIAL FIRST FLOOR PLAN
1198	A-B108	PARTIAL FIRST FLOOR DIMENSION PLAN
1199	A-B109	PARTIAL FIRST FLOOR PLAN
1200	A-B110	PARTIAL FIRST FLOOR DIMENSION PLAN
1201	A-B111	PARTIAL MEZZANINE FLOOR PLAN
1202	A-B112	PARTIAL MEZZANINE FLOOR DIMENSION PLAN
1203	A-B113	PARTIAL MEZZANINE FLOOR PLAN
1204	A-B114	PARTIAL MEZZANINE FLOOR DIMENSION PLAN
1205	A-B115	PARTIAL MEZZANINE FLOOR PLAN
1206	A-B116	PARTIAL MEZZANINE FLOOR DIMENSION PLAN
1207	A-B117	PARTIAL MEZZANINE FLOOR PLAN
1208	A-B118	SMOKE PARTITION AND RATED WALL PLAN
1209	A-B120	OVERALL FIRST FLOOR REFLECTED CEILING PLAN
1210	A-B121	OVERALL MEZZANINE FLOOR REFLECTED CEILING PLAN
1211	A-B122	PARTIAL FIRST FLOOR REFLECTED CEILING PLAN
1212	A-B123	PARTIAL FIRST FLOOR REFLECTED CEILING PLAN
1213	A-B124	PARTIAL FIRST FLOOR REFLECTED CEILING PLAN
1214	A-B125	PARTIAL MEZZANINE FLOOR REFLECTED CEILING PLAN
1215	A-B130	OVERALL ROOF PLAN
1216	A-B131	PARTIAL ROOF PLAN
1217	A-B132	PARTIAL ROOF PLAN
1218	A-B133	PARTIAL ROOF PLAN
1219	A-B201	EXTERIOR ELEVATIONS
1220	A-B202	EXTERIOR ELEVATIONS
1221	A-B301	BUILDING SECTIONS
1222	A-B302	BUILDING SECTIONS
1223	A-B303	BUILDING SECTIONS
1224	A-B304	BUILDING SECTIONS
1225	A-B305	WALL SECTIONS
1226	A-B306	WALL SECTIONS
1227	A-B307	WALL SECTIONS
1228	A-B308	WALL SECTIONS
1229	A-B309	WALL SECTIONS
1230	A-B310	WALL SECTIONS
1231	A-B311	WALL SECTIONS
1232	A-B401	DETAILED STAIRS PLANS & SECTIONS
1233	A-B402	STAIR DETAILS
1234	A-B403	MOUNTING DIMENSIONS & INTERIOR ELEVATIONS
1235	A-B404	INTERIOR ELEVATIONS
1236	A-B405	DETAILED FLOOR PLANS & INTERIOR ELEVATIONS
1237	A-B406	DETAILED FLOOR PLANS & INTERIOR ELEVATIONS
1238	A-B407	DETAILED FLOOR PLANS & INTERIOR ELEVATIONS
1239	A-B408	DETAILED FLOOR PLAN & INTERIOR ELEVATIONS
1240	A-B409	DETAILED FLOOR PLAN & INTERIOR ELEVATIONS
1241	A-B410	DETAILED FLOOR PLAN & INTERIOR ELEVATIONS
1242	A-B411	DETAILED PLAN, INTERIOR ELEVATIONS & DETAILS
1243	A-B412	DETAILED PLANS, INTERIOR ELEVATIONS & DETAILS
1244	A-B501	WALL TYPES
1245	A-B502	WALL TYPES
1246	A-B601	STANDARD DOOR SCHEDULE, TYPES, FRAMES & NOTES
1247	A-B602	STANDARD DOOR SCHEDULE, TYPES, FRAMES & NOTES
1248	A-B603	STANDARD DOOR SCHEDULE, TYPES, FRAMES & NOTES
1249	A-B604	STANDARD WINDOW, TYPES & NOTES
1250	A-B605	DOOR DETAILS
1251	A-B606	DOOR DETAILS
1252	A-B607	WINDOW DETAILS
1253	A-B608	DOOR, WINDOW AND SKYLIGHT DETAILS
1254	A-B611	ROOM FINISH, COLOR & MATERIAL SCHEDULE
1255	A-B612	ROOM FINISH, COLOR & MATERIAL SCHEDULE
1256	A-B613	FLOOR FINISH PATTERN PLAN
1257	A-B620	SIGN SCHEDULE
1258	A-B621	SIGN SCHEDULE
1259	A-B701	MILLWORK DETAILS
1260	A-B702	INTERIOR DETAILS
	A-B703	NOT USED
1261	A-B704	ROOF AND MISCELLANEOUS EXTERIOR DETAILS
1262	A-B801	DETENTION DOOR & WINDOW SCHEDULE
1263	A-B802	DETENTION NOTES, DOORS AND FRAME ELEVATIONS
1264	A-B803	DETENTION WINDOW AND GRILLAGE ELEVATIONS
1265	A-B804	DETENTION DETAILS
1266	A-B805	DETENTION DETAILS
1267	A-B806	DETENTION DETAILS
1268	A-B807	DETENTION DETAILS
1269	A-B901	PARTIAL FIRST FLOOR N.I.C. FURN & EQUIP PLAN
1270	A-B902	PARTIAL FIRST FLOOR N.I.C. FURN & EQUIP PLAN
1271	A-B903	PARTIAL FIRST FLOOR N.I.C. FURN & EQUIP PLAN
1272	A-B904	PARTIAL FIRST FLOOR N.I.C. FURN & EQUIP PLAN
		PLUMBING
1273	P-B001	PLUMBING SCHEDULE AND LEGENDS
1274	P-B101	FIRST FLOOR PLUMBING PLAN
1275	P-B102	MEZZANINE FLOOR PLUMBING PLAN
1276	P-B103	ROOF PLUMBING PLAN
1277	P-B104	KITCHEN PLUMBING PLAN
1278	P-B501	PLUMBING DETAILS
1279	P-B601	PLUMBING SCHEDULES
1280	P-B901	SANITARY PIPING DIAGRAM-GENERAL
1281	P-B902	WATER PIPING DIAGRAM-GENERAL
1282	P-B903	SANITARY AND WATER PIPING DIAGRAM-KITCHEN
1283	P-B904	FUEL GAS PIPING DIAGRAM
		MECHANICAL
1284	M-B001	MECHANICAL LEGENDS
1285	M-B101	PARTIAL FIRST FLOOR HVAC PLAN
1286	M-B102	PARTIAL FIRST FLOOR HVAC PLAN
1287	M-B103	PARTIAL FIRST FLOOR HVAC PLAN
1288	M-B104	PARTIAL MEZZANINE FLOOR HVAC PLAN
1289	M-B105	PARTIAL MEZZANINE FLOOR HVAC PLAN
1290	M-B106	PARTIAL MEZZANINE FLOOR HVAC PLAN
1291	M-B107	PARTIAL ROOF HVAC PLAN
1292	M-B108	PARTIAL ROOF HVAC PLAN
1293	M-B109	PARTIAL ROOF HVAC PLAN
1294	M-B501	MECHANICAL DETAILS
1295	M-B601	SEQUENCE OF OPERATION & POINTS LIST
1296	M-B602	MECHANICAL SCHEDULES
		ELECTRICAL
1297	E-B001	GENERAL NOTES, FIRE ALARM NOTES
1298	E-B002	LIGHTING FIXTURE SCHEDULE, ELECTRICAL SYMBOLS
1299	E-B101	ELECTRICAL DISTRIBUTION PLAN
1300	E-B102	ELECTRICAL ROOF PLAN
1301	E-B401	PARTIAL FIRST FLOOR LIGHTING PLAN-1
1302	E-B402	PARTIAL FIRST FLOOR LIGHTING PLAN-2
1303	E-B403	PARTIAL FIRST FLOOR LIGHTING PLAN-3
1304	E-B404	PARTIAL FIRST FLOOR LIGHTING PLAN-4
1305	E-B405	MEZZANINE LIGHTING PLAN
1306	E-B406	PARTIAL FIRST FLOOR POWER PLAN-1
1307	E-B407	PARTIAL FIRST FLOOR POWER PLAN-2
1308	E-B408	PARTIAL FIRST FLOOR POWER PLAN-3
1309	E-B409	PARTIAL FIRST FLOOR POWER PLAN-4
1310	E-B410	MEZZANINE POWER PLAN
1311	E-B411	PARTIAL FIRST FLOOR FIRE ALARM PLAN-1
1312	E-B412	PARTIAL FIRST FLOOR FIRE ALARM PLAN-2
1313	E-B413	PARTIAL FIRST FLOOR FIRE ALARM PLAN-3
1314	E-B414	MEZZANINE FIRE ALARM PLAN
1315	E-B415	ENLARGED ELECTRICAL PLANS
1316	E-B416	FOOD SERVICE POWER PLAN
1317	E-B501	TYPICAL SECURITY PLATE MOUNTING DETAILS, FIRE ALARM DEVICE
1318	E-B502	SECURITY LIGHTING FIXTURE MOUNTING DETAILS, LIGHTING AND DEVICE PLATE KEYPLANS
1319	E-B601	PANEL SCHEDULES
1320	E-B602	PANEL SCHEDULES
1321	E-B603	PANEL SCHEDULES
1322	E-B604	ONE LINE DIAGRAM
1323	E-B605	FIRE ALARM RISER DIAGRAM
		FIRE PROTECTION
1324	FP-B101	FIRE PROTECTION FLOOR PLAN
1325	FP-B102	MEZZANINE FIRE PROTECTION PLAN
1326	FP-B103	ADD ALTERNATE A-2: FM-200 PROTECTION PLAN
		FOOD SERVICE
1327	QF-B101	1st FLOOR-FOOD SERVICE EQUIPMENT PLAN
1328	QF-B102	PARTIAL 1ST FLR-FOOD SERVICE EQUIPMENT PLAN & EQUIP SCHED
1329	QF-B103	PARTIAL ROOF PLAN-REMOTE CONDENSER ELECTRICAL PLAN, PARTIAL ROOF PLAN-REMOTE CONDENSER BLDG WORK & REFRIGERATION PLAN
1330	QF-B104	PARTIAL 1ST FLR-FOOD SERVICE EQUIPMENT PLAN & FOOD SERVICE EQUIPMENT ELECTRICAL SCHEDULE
1331	QF-B105	PARTIAL 1ST FLR-FOOD SERVICE EQUIPMENT MECHANICAL PLAN, FOOD SERVICE EQUIPMENT MECHANICAL SCHEDULE
1332	QF-B106	PARTIAL 1ST FLR-F.S. EQUIPMENT BUILDING WORK & REFRIGERATION PLAN, DETAILS
1333	QF-B107	FOOD SERVICE NOTES
1334	QF-B108	FOOD SERVICE ELEVATIONS & SECTIONS
1335	QF-B109	FOOD SERVICE ELEVATIONS & SECTIONS
1336	QF-B110	FOOD SERVICE ELEVATIONS & SECTIONS
1337	QF-B111	FOOD SERVICE DETAILS
1338	QF-B112	FOOD SERVICE DETAILS
		COMMUNICATION
1339	EC-B103	PARTIAL FIRST FLOOR COMMUNICATIONS PLAN
1340	EC-B105	PARTIAL FIRST FLOOR COMMUNICATIONS PLAN
1341	EC-B107	PARTIAL FIRST FLOOR COMMUNICATIONS PLAN
1342	EC-B117	PARTIAL MEZZANINE LEVEL COMMUNICATIONS PLAN
		SECURITY
1343	ES-B103	PARTIAL FIRST FLOOR SECURITY PLAN
1344	ES-B105	PARTIAL FIRST FLOOR SECURITY PLAN
1345	ES-B107	PARTIAL FIRST FLOOR SECURITY PLAN
1346	ES-B109	PARTIAL FIRST FLOOR SECURITY PLAN
1347	ES-B115	PARTIAL MEZZANINE FLOOR SECURITY PLAN
1348	ES-B201	CENTRAL CONTROL PLANS, ELEVATIONS & DETAILS
1349	ES-B202	SOUTH MOVEMENT CONTROL PLAN ELEVATIONS & DETAILS
	ES-B203	NOT USED
1350	ES-B211	SECURITY ELECT. ROOM PLANS, ELEVATIONS & DETAILS

REVISION NO.	SYM.	DESCRIPTION	SHT.__ OF__	DATE	APPROVED: PUBLIC WORKS ADMINISTRATOR

LLOYD T. ARAKAKI
LICENSED PROFESSIONAL ARCHITECT
No. 5336
HAWAII, U.S.A.

This work was prepared by me or under my supervision and construction of this project will be under my observation. (Observation of construction as defined in Chapter 16-115, Subchapter 1 Definitions of the Hawaii Administrative Rules, "Professional Engineers, Architects, Surveyors, and Landscape Architects.")

signature 04/30/08 expiration date of the license

NOTE: Contractor to check and verify dimensions at job before proceeding with work

DEPT. OF ACCOUNTING & GENERAL SERVICES
DIVISION OF PUBLIC WORKS
STATE OF HAWAII

KAPOLEI JUDICIARY COMPLEX
KAPOLEI, OAHU, HAWAII

VOLUME 2
DRAWING INDEX

ARCHITECTS HAWAII, LTD.

DESIGNED BY:	CHECKED BY:	DAGS JOB NO.	DRAWING NO.
DB	MK	12-21-7043	G-017
DRAWN BY: AHL	APPROVED BY: –	DATE NOV 2006	SHEET 358 OF 1021 SHTS.

SCALE: AS SHOWN

FIELD POSTED RECORD DRAWINGS Certified by Seth Maughige Date: January 29, 2013 Unlimited Construction Services, Inc.

DATE 01/8/08

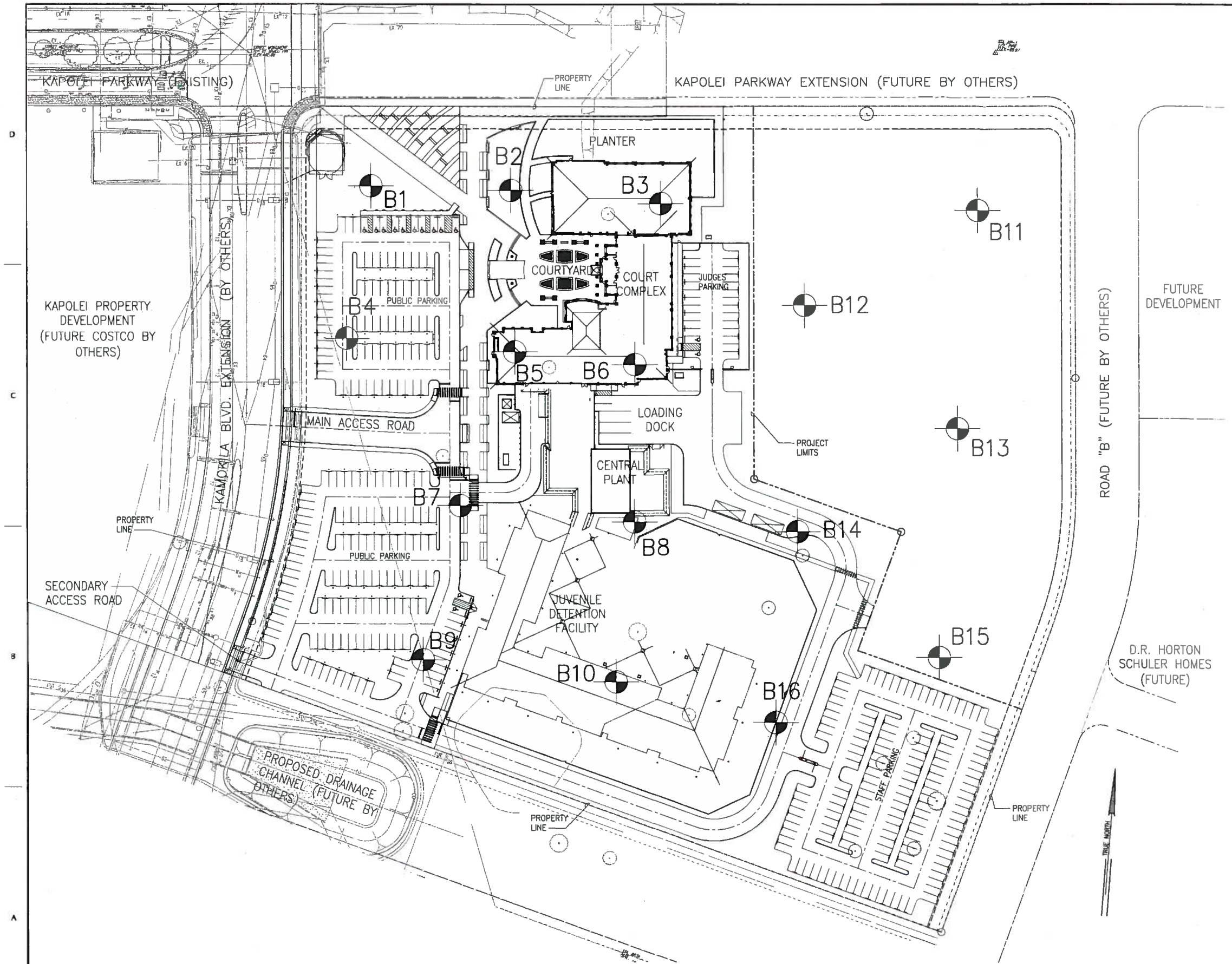

BORING LOG LOCATIONS

SCALE: 1"=50'

BORING NOTES

1. THE BORING LOGS SHOWN ON THE DRAWINGS INDICATE THE APPROXIMATE SUBSURFACE CONDITIONS ENCOUNTERED AT THAT SPECIFIED LOCATION AND AT THE TIMES OF THE FIELD EXPLORATION ONLY, AND MAY NOT REPRESENT CONDITIONS AT OTHER LOCATIONS OR ON OTHER DATES. SOIL CONDITIONS MAY CHANGE WITH THE WEATHER, PASSAGE OF TIME, AND/OR IMPROVEMENTS OR CHANGES AT THE SITE.
2. THE PENETRATION RESISTANCE SHOWN ON THE BORING LOGS INDICATE THE NUMBER OF BLOWS REQUIRED FOR A 3-INCH O.D. SPLIT TUBE SAMPLER.
3. THE INFORMATION PROVIDED IN THE BORING LOGS WERE FOR THE EXCLUSIVE USE OF THE STATE FOR DESIGN AND EARTHWORK PURPOSES ONLY. BIDDERS SHALL EXAMINE THE SITE AND MAKE THEIR OWN INTERPRETATIONS AND CONCLUSIONS REGARDING THE MATERIALS TO BE ENCOUNTERED. THE STATE ASSUMES NO RESPONSIBILITY AS TO THE ACCURACY AND/OR SUFFICIENCY OF THE BORING INFORMATION AND INTERPRETATION MADE THEREOF AND WILL MAKE NO GUARANTEE OF THE SAME.
4. THE BORING LOGS SHOWN ON THE DRAWINGS WERE OBTAINED FROM THE SOILS REPORT TITLED, "FOUNDATION INVESTIGATION, KAPOLEI JUDICIARY COMPLEX, OAHU, OAHU, HAWAII," PREPARED BY HIRATA & ASSOCIATES, INC., DATED JANUARY 23, 2006.

GRAPHIC SCALE

1" = 50' 50' 25' 0 50' 100'

REVISION NO.	SYM.	DESCRIPTION	SHT.__ OF__	DATE	APPROVED: PUBLIC WORKS ADMINISTRATOR

PAUL S. MORIMOTO LICENSED PROFESSIONAL ENGINEER No. 5299-C HAWAII, U.S.A.

This work was prepared by me or under my supervision and construction of this project will be under my observation. Observation, construction as defined in Chapter 16 of the Hawaii Administrative Rules, Professional Engineers, Architects, Surveyors, and Landscape Architects.

signature 04/30/08 expiration date of the license

NOTE: Contractor to check and verify dimensions at job before proceeding with work.

DEPT. OF ACCOUNTING & GENERAL SERVICES
DIVISION OF PUBLIC WORKS
STATE OF HAWAII

KAPOLEI JUDICIARY COMPLEX
KAPOLEI, OAHU, HAWAII

BORING LOCATIONS AND NOTES

HIRATA & ASSOC., INC.		JOB NO.	DRAWING NO.
DESIGNED BY: RIKY	CHECKED BY: PSM	12-21-7043	B-101
DRAWN BY: RIKY	APPROVED BY: PSM	DATE NOV 2006	SHEET 19 OF 1021 SHTS.
SCALE: 1" = 50'-0"			

FILE ____ SAAN ____ FOLDER ____

POSTED RECORD DRAWINGS Certified by __/__/__ Date November 6, 2012 Unlimited Construction Services, Inc.

W.O. 05-4124

BORING NO. B12 DRIVING WT. 140 lb. START DATE 7/05/05
SURFACE ELEV. 59.8± DROP 30 in. END DATE 7/05/05

DEPTH	GRAPH	SAMPLE	BLOWS PER FOOT	DRY DENSITY (PCF)	MOIST. CONT. (%)	DESCRIPTION
0			25/2"	72	32	Clayey SILT (ML) – Brown, moist, medium stiff, with coralline gravel.
			10/No Penetration			CORAL RUBBLESTONE – Tan, moist, dense. (Silty sand with coralline gravel)
			57	102	12	
5			55/6"	96	12	Grayish brown silty clay at 5 feet.
						End boring at 6 feet.
10						Neither groundwater nor seepage water encountered.
15						
20						
25						
30						Plate A4.20

W.O. 05-4124

BORING NO. B13 DRIVING WT. 140 lb. START DATE 7/05/05
SURFACE ELEV. 62.4± DROP 30 in. END DATE 7/05/05

DEPTH	GRAPH	SAMPLE	BLOWS PER FOOT	DRY DENSITY (PCF)	MOIST. CONT. (%)	DESCRIPTION
0			10/6"	94	7	Silty SAND (SM) – Tan, slightly moist, dense, with coralline gravel.
			75/5"			Silty CLAY (CH) – Grayish brown, moist, stiff, with coralline gravel.
			81/9"	72	23	
			10/No Penetration			
5			80/8"	83	21	
			10/No Penetration			End boring at 6 feet.
10						Neither groundwater nor seepage water encountered.
15						
20						
25						
30						Plate A4.21

W.O. 05-4124

BORING NO. B14 DRIVING WT. 140 lb. START DATE 7/11/05
SURFACE ELEV. 63.5± DROP 30 in. END DATE 7/11/05

DEPTH	GRAPH	SAMPLE	BLOWS PER FOOT	DRY DENSITY (PCF)	MOIST. CONT. (%)	DESCRIPTION
0						Clayey SILT (ML) – Brown, moist, medium stiff, with coralline gravel.
			76	73	16	CORAL RUBBLESTONE – Tan, moist, dense. (Silty sand with coralline gravel)
			16	89	16	Medium dense at 3 feet.
5			32	93	6	
10			59/11"	100	5	
			10/No Penetration			
15			30	104	8	
20			37	107	16	
						End boring at 20.5 feet.
25						Neither groundwater nor seepage water encountered.
30						Plate A4.22

W.O. 05-4124

BORING NO. B15 DRIVING WT. 140 lb. START DATE 7/05/05
SURFACE ELEV. 57.9± DROP 30 in. END DATE 7/05/05

DEPTH	GRAPH	SAMPLE	BLOWS PER FOOT	DRY DENSITY (PCF)	MOIST. CONT. (%)	DESCRIPTION
0			50/6"	80	20	Clayey SILT (ML) – Reddish brown, moist, medium stiff, with coralline gravel.
			10/No Penetration			CORAL RUBBLESTONE – Tan, moist, dense. (Silty sand with coralline gravel)
			95	109	7	
5			60/6"	95	8	
			10/No Penetration			
10			79	108	15	
						End boring at 10.5 feet.
15						Neither groundwater nor seepage water encountered.
20						
25						
30						Plate A4.23

W.O. 05-4124

BORING NO. B16 DRIVING WT. 140 lb. START DATE 7/11/05
SURFACE ELEV. 58.6± DROP 30 in. END DATE 7/11/05

DEPTH	GRAPH	SAMPLE	BLOWS PER FOOT	DRY DENSITY (PCF)	MOIST. CONT. (%)	DESCRIPTION
0						Clayey SILT (ML) – Brown, slightly moist, medium stiff.
			21	87	12	CORAL RUBBLESTONE– Tan, moist, medium dense. (Silty sand with coralline gravel)
5			49	98	18	Dense from 4 feet.
			50/3"	No Recovery		
			10/No Penetration			
10						
			58	103	3	
15						
			10/No Penetration			
						End boring at 18 feet.
20						
25						Neither groundwater nor seepage water encountered.
30						Plate A4.24

REVISION NO.	SYM.	DESCRIPTION	SHT. OF	DATE	APPROVED: PUBLIC WORKS ADMINISTRATOR

PAUL S. MORIMOTO
LICENSED PROFESSIONAL ENGINEER
No. 5299-C
HAWAII, U.S.A.

This work was prepared by me or under my supervision and construction of this project will be under my observation. (Chapter 464, Construction as defined in Section 16-115, Subchapter 3, Rules of the Board Administrating Rules, "Professional Engineers, Architects, Surveyors, and Landscape Architects.")

Signature — expiration date of the license

NOTE: Contractor to check and verify dimensions at job before proceeding with work.

DEPT. OF ACCOUNTING & GENERAL SERVICES
DIVISION OF PUBLIC WORKS
STATE OF HAWAII

KAPOLEI JUDICIARY COMPLEX
KAPOLEI, OAHU, HAWAII

BORING LOG - 4

HIRATA & ASSOC., INC.

DESIGNED BY: RKY	CHECKED BY: PSM	BASE JOB NO. 12-21-7043	DRAWING NO. B-105
DRAWN BY: RKY	APPROVED BY: PSM	DATE NOV 2005	SHT. 19 OF 101 SHTS.
SCALE: NO SCALE			

FILE ____ DRAW ____ FOLDER ____

POSTED RECORD DRAWINGS Certified by: Date: November 6, 2012
Unlimited Construction Services, Inc.

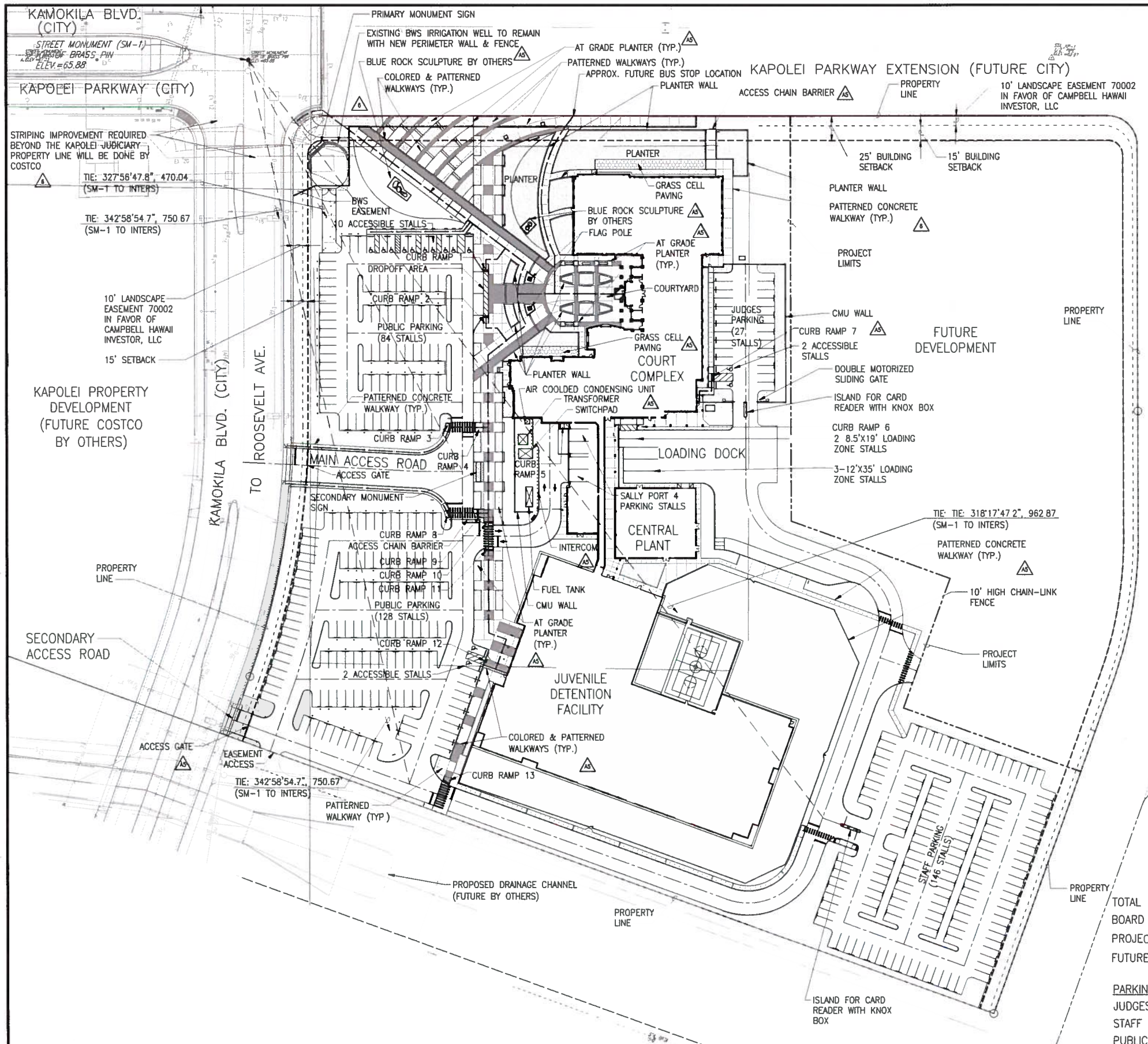

GENERAL SITE PLAN

SCALE: 1"=50'

GRAPHIC SCALE

1" = 50' 50' 25' 0 50' 100'

LEGEND:

- PLANTING AREA WITHIN WALKWAY AREA
- PATTERNED CONCRETE WALKWAY
- COLORED & PATTERNED CONCRETE WALKWAY
- GRASS CELL PAVING AREA
- PROPERTY LINE
- BUILDING SETBACK
- ACCESSIBLE PATH
- PROJECT LIMITS
- TEMPORARY/PROPOSED/FUTURE RD.
- EXISTING
- LANDSCAPE UTILITY EXISTING EASEMENT
- RAILROAD TRACK (EXISTING)

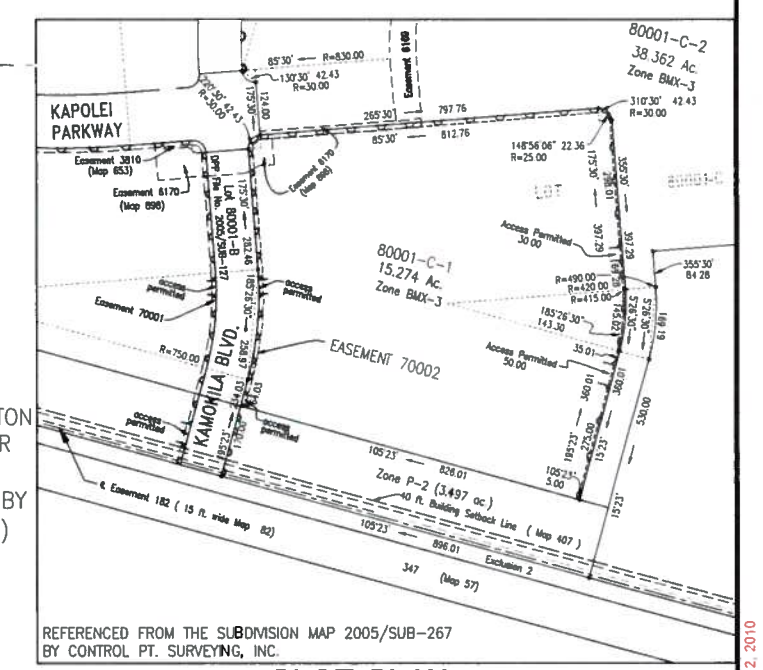

PLOT PLAN

SCALE: 1"=200'

TOTAL LOT AREA	15.27 AC
BOARD OF WATER SUPPLY LOT	0.18 AC
PROJECT AREA	10.79 AC
FUTURE DEVELOPMENT AREA	4.30 AC

PARKING SUMMARY

JUDGES PARKING = 27
STAFF PARKING = 146
PUBLIC PARKING = 212
SALLY PORT PARKING = 4
(NOTE: ALL PARKING STALLS ARE STANDARD SIZE)
12'X35' LOADING ZONE STALLS = 3
8.5'X19' LOADING ZONE STALLS = 2

REVISION NO.	SYM.	DESCRIPTION	SHT.__ OF.__	DATE	APPROVED: PUBLIC WORKS ADMINISTRATOR
PCD-06	6	REVISIONS TO PLANTER & WALKWAY CONFIGURATION TO ADDRESS DPP REVIEW COMMENTS.	3/31	6/6/2008	
PCD-01	1	REVISED PROJECT LIMITS LINE TYPE AS PER DPP COMMENTS.	3/38	7/25/2007	
ADD-05	AD	ADD AND REVISE TEXT CALLOUTS AND ADD LEGEND AND CHAIN BARRIER	1/195	2/02/2007	

CHAD M. MCDONALD LICENSED PROFESSIONAL ENGINEER No. 9793-C HAWAII, U.S.A.

This work was prepared by me or under my supervision and construction of this project will be under my observation. (Observation of construction as defined in Chapter 16-115, Subchapter 1, Definitions of the Hawaii Administrative Rules, Professional Engineers, Architects, Surveyors, and Landscape Architects.)

signature 04/30/12 expiration date of the license

NOTE: Contractor to check and verify dimensions at job before proceeding with work.

DEPT. OF ACCOUNTING & GENERAL SERVICES
DIVISION OF PUBLIC WORKS
STATE OF HAWAII

KAPOLEI JUDICIARY COMPLEX
KAPOLEI, OAHU, HAWAII

GENERAL SITE PLAN

MITSUNAGA & ASSOCIATES, INC.

DESIGNED BY: KS	CHECKED BY: CM	BASE JOB NO. 12-21-7043	DRAWING NO. C-101
DRAWN BY: CADD	APPROVED BY: CM	DATE NOV 2006	SHEET 22 OF 1032 SHTS.
SCALE: 1" = 50'-0"			

FILE ____ DRAW ____ FOLDER ____

Certified by /fire-sc/fonnsmarty Date August 12, 2010
Unlimited Construction Services, Inc

FIELD POSTED RECORD DRAWINGS

① BEGIN/END 6" STANDARD CONCRTE CURB.

④ "NO PARKING SERVICE VEHICLE USE ONLY" IN 4" HIGH WHITE LETTERS ON PAINTED RED CURB. CENTERED AT LOCATIONS NOTED ON C-102, 103 & 105.

LEGEND:

- PLANTING AREA WITHIN WALKWAY AREA
- PATTERNED CONCRETE WALKWAY
- COLORED & PATTERNED CONCRETE WALKWAY

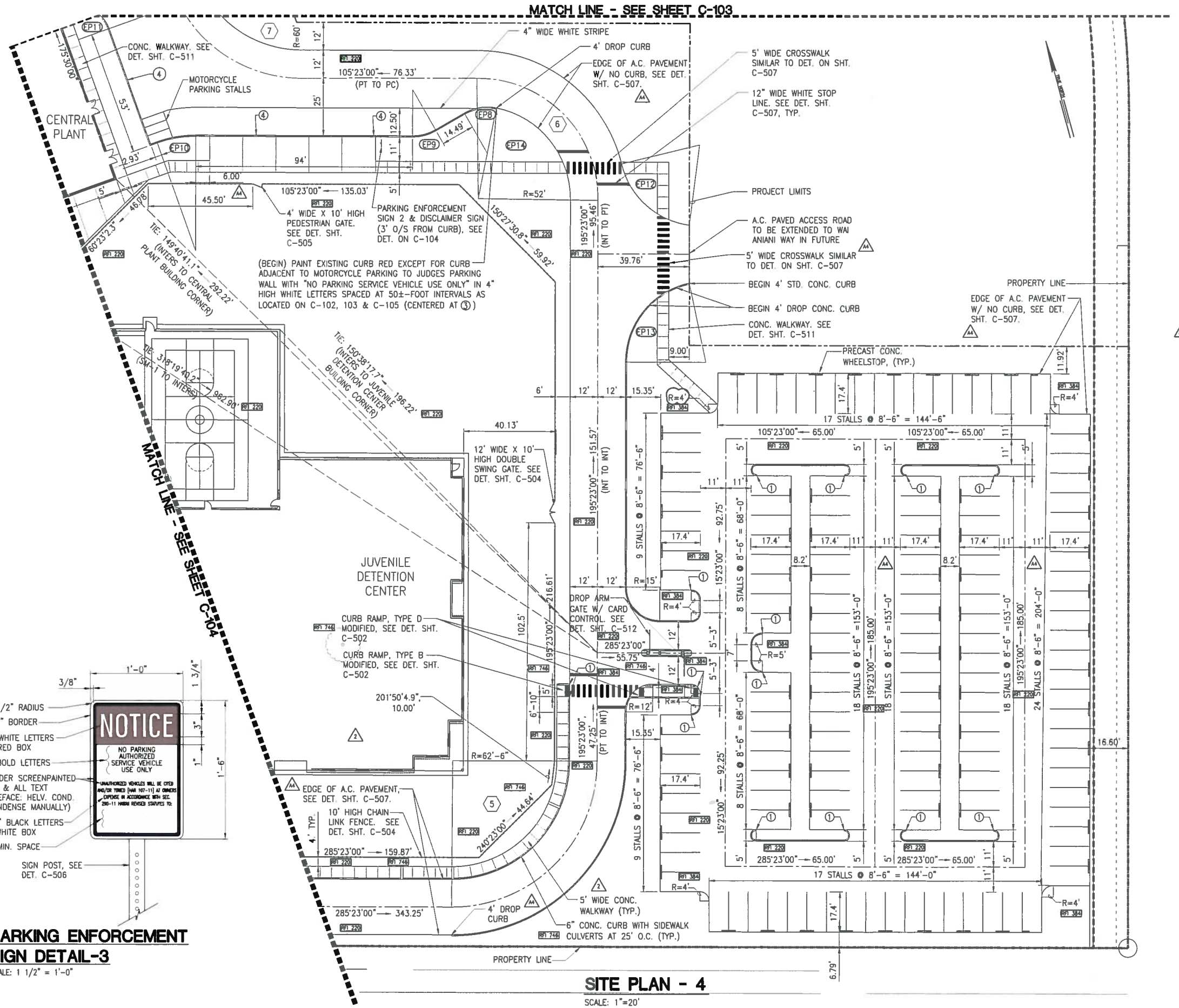

SITE PLAN - 4

SCALE: 1"=20'

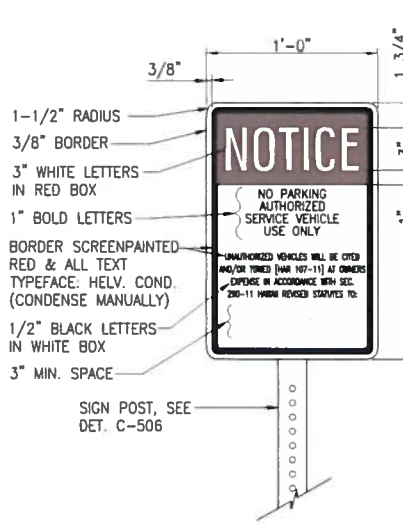

PARKING ENFORCEMENT SIGN DETAIL-3

SCALE: 1 1/2" = 1'-0"

℄ CURVE DATA

○	△	△/2	R	T	C	Lc
5	90°00'00"	45°00'00"	63.00'	63.00'	89.10'	98.96'
6	90°00'00"	45°00'00"	52.00'	52.00'	73.54'	81.68'
7	70°07'00"	35°03'30"	60.00'	42.10'	68.93'	73.43'

E.P. CURVE DATA

⬭	△	△/2	R	T	C	Lc
EP8	41°15'28"	20°37'44"	20.00'	7.53'	14.09'	14.40'
EP9	29°59'55"	14°59'57.5"	20.00'	5.36'	10.35'	10.47'
EP10	19°53'00"	9°56'30"	50.00'	8.76'	17.26'	17.35'
EP11	90°00'00"	45°00'00"	34.00'	34.00'	48.08'	53.41'
EP12	69°00'31"	34°30'15.5"	35.00'	24.06'	39.65'	42.15'
EP13	78°02'35"	39°01'17.5"	35.00'	28.36'	44.07'	47.67'
EP14	78°44'27"	39°22'13.5"	40.00'	32.82'	50.75'	54.97'

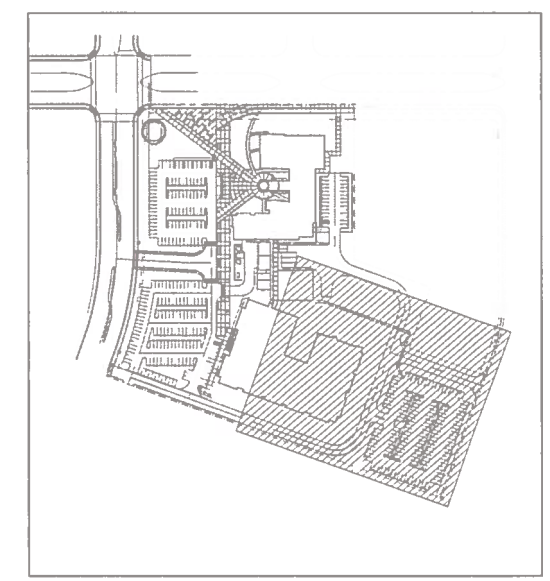

KEY PLAN

SCALE: 1"=200'

GRAPHIC SCALE 1" = 20' — 20' 10' 0 20' 40'

REVISION NO.	SYM.	DESCRIPTION	SHT. OF	DATE	APPROVED: PUBLIC WORKS ADMINISTRATOR
PCD-05	5	UPDATED SHEET TO SHOW REVISIONS FOR RFI NOS. 220 & 384	4/7	5/09/2008	
PCD-02	2	ADDED WALKWAY FROM JOF TO STAFF PARKING, CROSSWALK, REVISED DIMENSION CALLOUTS	2/244	10/26/2007	
ADD-04	AA	ADD AND REVISE TEXT CALLOUTS & ADD LEGEND	4/195	1/26/2007	

CHAD M. MCDONALD — LICENSED PROFESSIONAL ENGINEER No. 9793-C — HAWAII, U.S.A.

This work was prepared by me or under my supervision and construction of this project will be under my observation. (Observation of construction as defined in Chapter 16-115, Subchapter 1 Definitions of the Hawaii Administrative Rules, Professional Engineers, Architects, Surveyors, and Landscape Architects.)

signature — 04/30/10 expiration date of the license

NOTE: Contractor to check and verify dimensions at job before proceeding with work.

DEPT. OF ACCOUNTING & GENERAL SERVICES
DIVISION OF PUBLIC WORKS
STATE OF HAWAII

KAPOLEI JUDICIARY COMPLEX
KAPOLEI, OAHU, HAWAII

SITE PLAN - 4

MITSUNAGA & ASSOCIATES, INC.

DESIGNED BY: KS	CHECKED BY: CM	JOB NO. 12-21-7043	DRAWING NO. C-105
DRAWN BY: CADD	APPROVED BY: CM	DATE NOV. 2006	SHEET 25 OF 1032 SHTS.
SCALE: 1" = 20'-0"			

FIELD POSTED RECORD DRAWINGS — Certified by: _____ Date: Sept 12, 2012 — Unlimited Construction Services, Inc.

FILE ____ DRAW ____ PLOTS ____

MATCH LINE - SEE SHEET C-108

SEE MECH PLANS FOR CONT.

W.L. STA. 0+34
1-8"X4" TEE
1-4" GATE VALVE
1-VALVE BOX
1-CONC. BLOCK

W.L. "A" STA. 0+65
1-4" 1/4 BEND
1-CONC. BLOCK

CENTRAL PLANT

285°20'24" — 119.84'

330°20'24" — 54.48'

3/4" COPPER WATER LINE W/ 3/4" GV & VALVE BOX AND HOSE BIB ATTACHED TO LIGHT STANDARD BASE. SEE ELEC. PLAN SHT. E-A002 AND DTL. SHT. C-511. (L=18'±)

W.L. "A" STA. 15+56.26
1-8" 1/8 BEND
1-CONC. BLOCK

W.L. "A" STA. 16+10.74
1-8" 1/8 BEND
1-CONC. BLOCK

3/4" COPPER WATER LINE W/ 3/4" GV & VALVE BOX AND HOSE BIB ATTACHED TO LIGHT STANDARD BASE. SEE ELEC. PLAN SHT. E-A002 AND DTL. SHT. C-511. (L=20'±)

W.L. "A" STA. 17+03.55
FH CONN.
1-8" X 6" TEE
2-CONC. BLOCK
1-6" GATE VALVE
1-VALVE BOX
1-FH (HT.=4'-0")
25 LF 6" PIPE
1-FH MARKER
SEE BWS STD DTL. FH4

TRUE NORTH

STUBOUT & PLUG FOR FUTURE CONN.

W.L. "A" STA. 14+31.42
1-8"X8" TEE
1-8"GATE VALVE
1-VALVE BOX
1-CONC. BLOCK

W.L. "A" STA. 15+05
FH CONN.
1-8" X 6" TEE
1-8" GATE VALVE
1-6" GATE VALVE
2-VALVE BOX
25± LF 6" PIPE
1-FH MARKER
SEE BWS STD DTL. FH-6

S.L. "C" STA. 2+18
SMH #10
TOP=62.91
INV=56.20

W.L. "A" STA. 14+36.42
1-8" 1/8 BEND
1-8" 1/16 BEND
1-CONC. BLOCK

3/4" COPPER WATER LINE W/ 3/4" GV & VALVE BOX AND HOSE BIB ATTACHED TO LIGHT STANDARD BASE. SEE ELEC. PLAN SHT. E-A002 AND DTL. SHT. C-511. (L=160'±)

15°20'24" — 270.14'

MATCH LINE - SEE SHEET C-109

JUVENILE DETENTION FACILITY

3/4" COPPER WATER LINE W/ 3/4" GV & VALVE BOX AND HOSE BIB ATTACHED TO LIGHT STANDARD BASE. SEE ELEC. PLAN SHT. E-A002 AND DTL. SHT. C-511. (L=172'±)

W.L. "A" STA. 18+80.88
1-8" 1/4 BEND
1-CONC. BLOCK

W.L. "A" STA. 19+44.26
1-8" 1/4 BEND
1-CONC. BLOCK

3/4" COPPER WATER LINE W/ 3/4" GV & VALVE BOX AND HOSE BIB ATTACHED TO LIGHT STANDARD BASE. SEE ELEC. PLAN SHT. E-A002 AND DTL. SHT. C-511. (L=20'±)

3/4" COPPER WATER LINE W/ 3/4" GV & VALVE BOX AND HOSE BIB. SEE HOSE BIB DTL-1, SHT. C-511. (L=20'±)

60°20'24" — 63.38'

105°20'24" — 360.43'

ROAD "B" (FUTURE CITY)

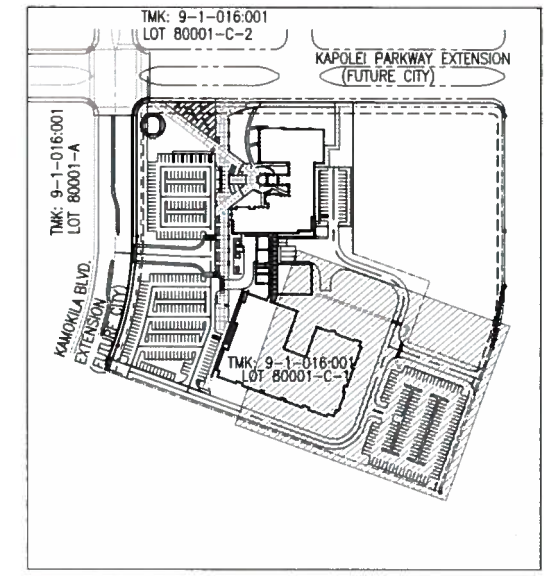

KEY PLAN

SCALE: 1"=200'

LEGEND:

- PROPERTY LINE
- W8 — WATER LINE
- D18 — DRAIN LINE
- S8 — SEWER LINE
- RW 2½" — NON-POTABLE WATER LINE
- G3 — GAS LINE
- DRAIN INLET / AREA DRAIN
- MANHOLE
- FIRE HYDRANT
- WATER METER

GRAPHIC SCALE

1" = 20' 20' 10' 0 20' 40'

UTILITY PLAN - 4

SCALE: 1"=20'

REVISION NO.	SYM.	DESCRIPTION	SHT. OF	DATE	APPROVED: PUBLIC WORKS ADMINISTRATOR
ADD-04	14	ADD AND REVISE TEXT CALLOUTS, ADD WATER LATERAL AND REVISE F.H. LOCATION	8 / 195	1/26/2007	

CHAD M. McDONALD
LICENSED PROFESSIONAL ENGINEER
No. 6713-C
HAWAII, U.S.A.

This work was prepared by me or under my supervision and construction of this project will be under my observation. (Observation of construction as defined by Chapter 16-115, Subchapter 1, Definitions of the Hawaii Administrative Rules, Professional Engineers, Architects, Surveyors, and Landscape Architects.)

signature — 04/30/10 — expiration date of the license

NOTE: Contractor to check and verify dimensions at job before proceeding with work.

DEPT. OF ACCOUNTING & GENERAL SERVICES
DIVISION OF PUBLIC WORKS
STATE OF HAWAII

KAPOLEI JUDICIARY COMPLEX
KAPOLEI, OAHU, HAWAII

UTILITY PLAN - 4

MITSUNAGA & ASSOCIATES, INC.		BASE JOB NO.	DRAWING NO.
DESIGNED BY: KS, CB, LT	CHECKED BY: CM	12-21-7043	C-110
DRAWN BY: TH, CB, LT	APPROVED BY: CM	DATE	SHEET
SCALE: 1" = 20'-0"		NOV 2006	31 OF 1032 SHTS.

FILE ____ DRAW ____ FOLDER ____

FIELD POSTED RECORD DRAWINGS

Certified by: Date August 2, 2010
Unlimited Construction Services, Inc.

MATCH LINE - SEE SHEET C-113

MATCH LINE - SEE SHEET C-114

CENTRAL PLANT
F=63.00

JUVENILE DETENTION CENTER
FF=62.75

LIMITS OF GRADING

PROJECT LIMITS

TRUE NORTH

ROAD "B" (FUTURE BY OTHERS)

D.L. "C" STA. 9+73=
D.L. "F" STA. 0+00
DI #14, DI TYPE 1
TOP=62.50
INV=58.28 (D6)
INV=57.78 (D12)
INV=57.28 (D18)

D.L. "C" STA. 8+37
DI #13, DI TYPE 1
TOP=60.80
INV=56.58

SEE MECH. PLANS FOR CONT.

D.L. "F" STA. 0+62
DI #18, DI TYPE 1
TOP=62.74 (AS-BUILT)
INV=58.82

SEE MECH. PLANS FOR CONT.(TYP.)

D.L. "C" STA. 7+22
DI #12, DI TYPE 2
TOP=59.50
INV=55.38 (D24)

D.L. "C" STA. 5+53=
D.L. "E" STA. 0+00
DI #11, DI TYPE 2
TOP=59.50
INV=53.75 (D12,D24)
INV=53.63 (D36)

SWALE (TYP.)
SEE DETAIL ON SHT. C-512

S=0.40% TYPICAL

LOW PT.

D.L. "E" STA. 3+52
DI #17, DI TYPE 2
TOP=58.45
INV=55.50

D.L. "E" STA. 2+47
DI #16, DI TYPE 2
TOP=59.05
INV=54.98

FINISH GRADE SHALL BE NO HIGHER THAN 1" BELOW THE CONC. SIDEWALK

6" CONC. CURB WITH SIDEWALK CULVERTS AT 50' O.C. & AT LOW PT., TYP.

APPROVED:

CHIEF, CIVIL ENGINEERING BRANCH, DPP DATE

SITE ELEVATIONS/GRADING & DRAINAGE PLAN - 4

SCALE: 1"=20'

KEY PLAN

SCALE: 1"=200'

LEGEND:

- EXISTING GROUND CONTOUR LINE
- 187 FINISH GROUND CONTOUR LINE
- D18 DRAIN LINE
- LIMITS OF GRADING
- TP TOP OF PAVEMENT
- TW TOP OF WALL
- TS TOP OF SLAB

GRAPHIC SCALE

1" = 20' 20' 10' 0 20' 40'

REVISION NO.	SYM.	DESCRIPTION	SHT. OF	DATE	APPROVED: PUBLIC WORKS ADMINISTRATOR
PCD-05	3	UPDATED SHEET TO SHOW REVISIONS FOR RFI NOS. 220 & 384	9/9	5/09/2008	
PCD-01	1	REVISED SHEET NAME & ADDED GRASS SWALE CALLOUT TO ADDRESS CITY REVIEW COMMENTS	14/38	7/25/2007	
ADD-04	4	ADD AND REVISE TEXT CALLOUTS	12/195	1/26/2007	

CHAD M. MCDONALD
LICENSED PROFESSIONAL ENGINEER
No. 9783-C
HAWAII, U.S.A.

This work was prepared by me or under my supervision and construction of this project will be under my observation. (Observation of construction as defined in Chapter 16-115, Subchapter 1, Subchapter of the Hawaii Administrative Rules, Professional Engineers, Architects, Surveyors, and Landscape Architects.)

signature 04/30/10 expiration date of the license

NOTE: Contractor to check and verify dimensions at job before proceeding with work.

DEPT. OF ACCOUNTING & GENERAL SERVICES
DIVISION OF PUBLIC WORKS
STATE OF HAWAII

KAPOLEI JUDICIARY COMPLEX
KAPOLEI, OAHU, HAWAII

SITE ELEVATIONS / GRADING & DRAINAGE PLAN - 4

MITSUNAGA & ASSOCIATES, INC.

DESIGNED BY	CHECKED BY	BASE JOB NO.	DRAWING NO.
KS	CM	12-21-7043	C-115
DRAWN BY	APPROVED BY	DATE	SHEET
TAH	CM	NOV 2006	38 OF 1032 SHTS.
SCALE: 1" = 20'-0"			

FILE ——— DRAW ——— FOLDER ———

Certified by Date August 2, 2010
Unlimited Construction Services Inc

FIELD POSTED RECORD DRAWINGS

KAPOLEI PARKWAY EXTENSION
(FUTURE BY OTHERS)

37 WP
35 WP
33 WP
3' x 5' HT, 2' x 4' CATV
STUB, CAP AND MARK 1"C FOR FUTURE RECLAIMED WATER PUMP
12" x 20" HANDHOLE, SEE C4 EA004
1"C TO PANEL "2C1A"
PROPOSED CATV HANDHOLE (BY OTHERS)
2C1A-33,35,37 HOMERUN VIA SWITCH "d" AT FACILITIES MAINTENANCE STAFF OFFICE
STUBUP 2-4" HT, 1-4" CATV AT COMM ROOM, SEE E-A203
COURT COMPLEX
FUTURE DEVELOPMENT
CONNECT TO PROPOSED HAWAIIAN TELCOM AND CATV STUBOUTS, STUBOUTS PROVIDED BY OTHERS
PROPOSED HAWAIIAN TELCOM HANDHOLE (BY OTHERS)
PROPOSED HECO MANHOLE (BY OTHERS)
8-4" SECONDARY POWER
FIRE ALARM CONTROL PANEL
SEE C1 EA006
3' x 5' HT, 2' x 4' CATV
SEE C4 EA002
1-2" FIRE ALARM
SWITCHBOARD "4C" AND PANEL "E4DPC" SEE E-A104
METERING SWITCHBOARD "4CC"
5' x 7' HECO
SEE E-C101
FIRE ALARM JUNCTION BOX
CENTRAL PLANT
PROPOSED DUCTLINE, (BY OTHERS), TYPICAL
KAMOKILA BOULEVARD EXTENSION (BY OTHERS)
+48", WP FOR LEAK ALARM
METERING SWITCHBOARD "4JD"
6-4" SECONDARY POWER, 1-2" FIRE ALARM
CONNECT TO PROPOSED HECO STUBOUTS
SEE JUVENILE DETENTION FACILITY DRAWINGS FOR CONTINUATION
2' x 4' HT, 2' x 4' CATV
SEE JUVENILE DETENTION FACILITY DRAWINGS FOR CONTINUATION
JUVENILE DETENTION FACILITY
SEE C3 EA006
KAMOKILA BOULEVARD EXTENSION TO ROOSEVELT AVENUE (BY OTHERS)
DRAINAGE CHANNEL (FUTURE BY OTHERS)

A1 ELECTRICAL SITE PLAN
SCALE: 1" = 40'

SCALE: 1"=10'
SCALE: 1"=40'

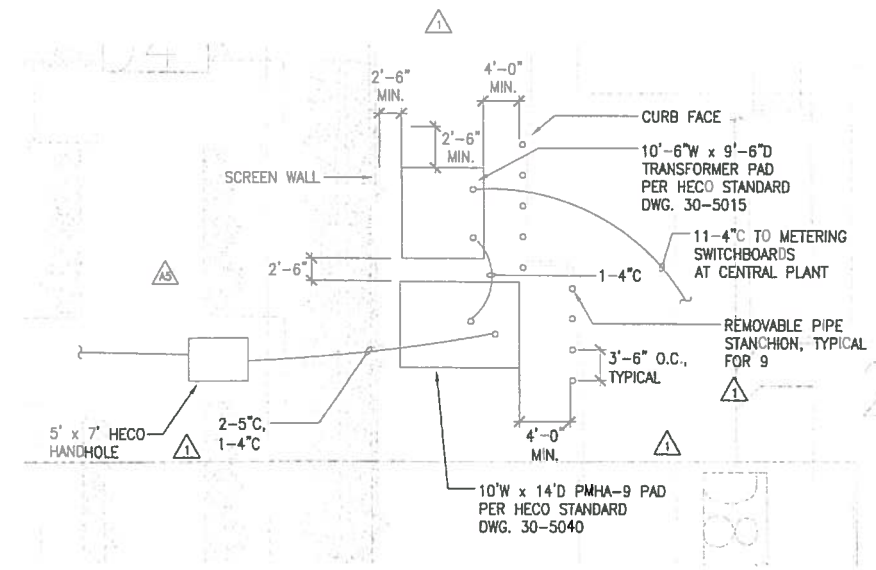

C4 EQUIPMENT PAD DETAIL PLAN
SCALE: 1" = 10'-0"

NOTE:

ALL DUCTS CONCRETE ENCASED UNLESS NOTED. PROVIDE HANDHOLES IN ACCORDANCE WITH UTILITY COMPANY STANDARDS.

1. 5' x 7' HECO – PRECAST CONCRETE, PER HECO #18843
2. 3' x 5' HT – PRECAST CONCRETE PER GTS-8395
3. 2' x 4' HT – PRECAST CONCRETE PER HT #435TB, 30" DEEP WITH POLYMER COVERS
4. 2' x 4' CATV – SIMILAR TO 2' x 4' HT EXCEPT WITH "CATV" STENCIL ON COVER

FIELD POSTED RECORD DRAWINGS

Certified by Seth Akasuge Date December 10, 2012
Unimited Construction Services Inc

FIELD POSTED RECORD DRAWINGS

REVISION NO.	SYM.	DESCRIPTION	SHT. OF	DATE	APPROVED: PUBLIC WORKS ADMINISTRATOR
PCD-1	1	REVISE HECO PRIMARY DUCT SIZES, ADD STANCHION	37/38	07/25/07	
ADD-05	A5	REVISE DUCT ALIGNMENT	144/197	02/02/07	

GLENN T. KARAMATSU
LICENSED PROFESSIONAL ENGINEER
No. 4388-E
HAWAII, U.S.A.

THIS WORK WAS PREPARED BY ME OR UNDER MY SUPERVISION AND CONSTRUCTION OF THIS PROJECT WILL BE UNDER MY OBSERVATION.

PROJECT ENGINEER for ECS, Inc.
APRIL 30, 2008
EXPIRATION DATE OF THE LICENSE

DEPT. OF ACCOUNTING & GENERAL SERVICES
DIVISION OF PUBLIC WORKS
STATE OF HAWAII

KAPOLEI JUDICIARY COMPLEX
KAPOLEI, OAHU, HAWAII

ELECTRICAL SITE PLAN

ECS, INC.		DAGS JOB NO.	DRAWING NO.
DESIGNED BY: MA	SUPERVISED BY: VM	12-21-7043	E-A002
DRAWN BY: CS	APPROVED BY: GK	DATE	SHEET 807
SCALE: AS SHOWN		NOV 2006	OF 1021 SHTS.

FILE _____ DRAW _____ FOLDER _____

5/13/10-15:44 Y:\014\014051\14-51 EA002.501.dwg

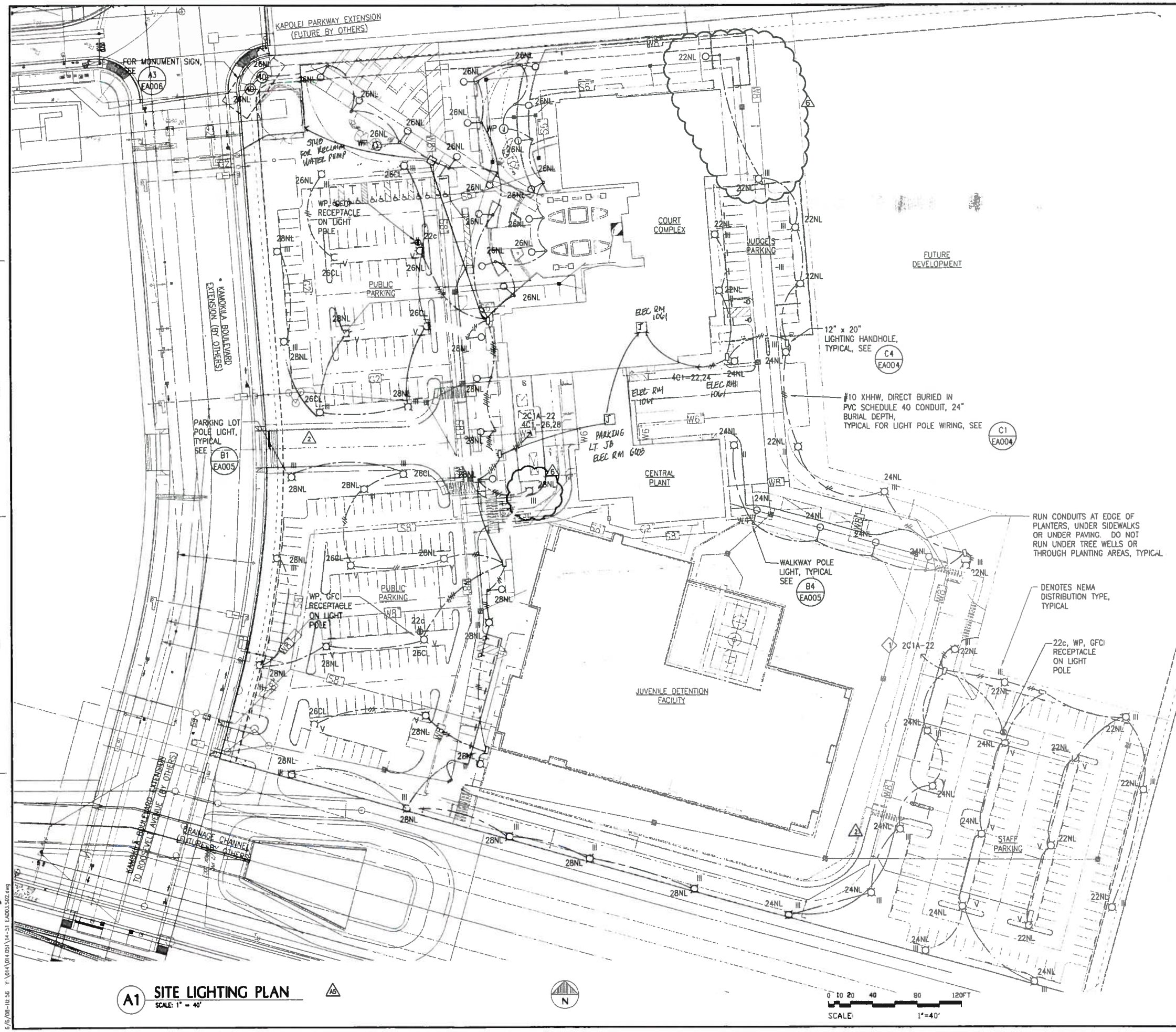

NOTES:

1. HOMERUN TO PANEL "2CIA" VIA SWITCH "c" IN COURT COMPLEX FACILITIES MAINTENANCE STAFF OFFICE. SEE SHEET E-A104.
2. PARKING AREA ILLUMINATION CRITERIA (UTILIZING 0.7 LIGHT LOSS FACTOR):

   JUDGE'S AND STAFF PARKING: 0.5 FOOTCANDLES MINIMUM; 10:1 MAXIMUM TO MINIMUM UNIFORMITY RATIO

   PUBLIC PARKING: 0.3 FOOTCANDLES MINIMUM; 10:1 MAXIMUM TO MINIMUM UNIFORMITY RATIO

AS-BUILT DRAWINGS/SPECIFICATIONS

THIS CERTIFIES THAT THE DIMENSIONS AND DETAILS SHOWN ON THIS SHEET REFLECT THE DIMENSIONS AND DETAILS AND SPECIFICATIONS AS CONSTRUCTED IN THE FIELD.

YASA ELECTRICAL SERVICES, INC.
Signature Date 14 Apr 10

FIELD POSTED RECORD DRAWINGS

REVISION NO.	SYM.	DESCRIPTION	SHT. OF	DATE	APPROVED: PUBLIC WORKS ADMINISTRATOR
PCO-06	6	REVISE LIGHT POLE LAYOUT	19/31	06/06/06	
PCO-2	2	REVISE LIGHT POLE LAYOUT AND CIRCUITING	147/244	10/26/07	
A00-05	45	REVISE LIGHT POLE LAYOUT AND CIRCUITING	145/197	02/2/07	

GLENN T. KARAMATSU
LICENSED PROFESSIONAL ENGINEER
No. 4368-E
HAWAII, U.S.A.

THIS WORK WAS PREPARED BY ME OR UNDER MY SUPERVISION AND CONSTRUCTION OF THIS PROJECT WILL BE UNDER MY OBSERVATION.

PROJECT ENGINEER for ECS, Inc.

APRIL 30, 2008
EXPIRATION DATE OF THE LICENSE

DEPT. OF ACCOUNTING & GENERAL SERVICES
DIVISION OF PUBLIC WORKS
STATE OF HAWAII

KAPOLEI JUDICIARY COMPLEX

KAPOLEI, OAHU, HAWAII

SITE LIGHTING PLAN

ECS, INC.

DESIGNED BY: MA	CHECKED BY: VM	BASE JOB NO. 12-21-7043	DRAWING NO. E-A003
DRAWN BY: CS	APPROVED BY: GK	DATE NOV 2006	SHEET 808 OF 1021 SHTS.
SCALE: AS SHOWN			

FILE ____ DRAW ____ FOLDER ____

A1 SITE LIGHTING PLAN
SCALE: 1" = 40'

6/6/08-10:56 Y:\014\014 001\14-51 EA003.S02.dwg

FIELD POSTED RECORD DRAWINGS Certified by: Jeff Mrowka Date: December 10, 2012 Unlimited Construction Services, Inc.

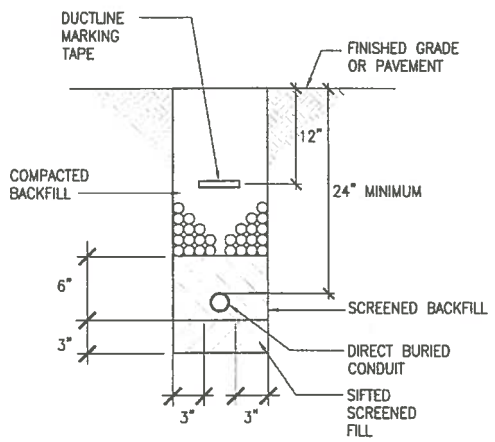

C1 TYPICAL AREA LIGHTING DUCT SECTION

NO SCALE

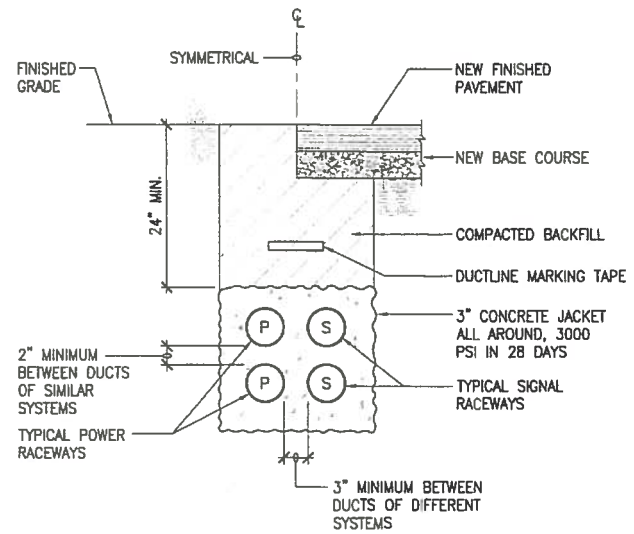

C2 TYPICAL CONCRETE ENCASED DUCT SECTION

NO SCALE

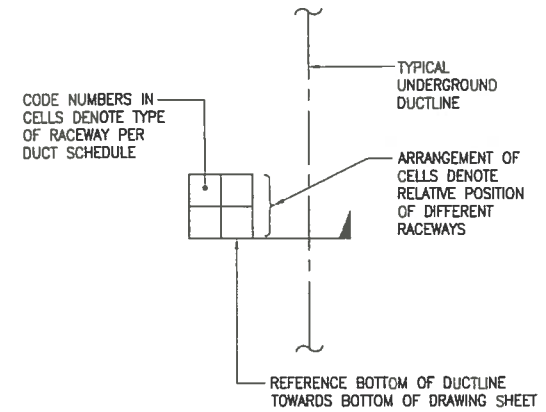

C3 DUCT SECTION FLAG CODE

NO SCALE

(NOTE: ALL DUCTLINES ARE CONCRETE ENCASED UNLESS OTHERWISE NOTED)

DUCT SCHEDULE

TYPE	DESCRIPTION
1	5" HECO PRIMARY, CONCRETE ENCASED PVC SCHEDULE 40, WITH PULLSTRING, CABLES BY HECO
2	4" HAWAIIAN TELCOM, CONCRETE ENCASED PER GTS 8342 WITH MULETAPE, CABLES BY HAWAIIAN TELCOM
3	4" OCEANIC TIME WARNER CABLE, CONCRETE ENCASED PVC SCHEDULE 40, WITH MULETAPE, CABLES BY OCEANIC TIME WARNER CABLE
S	SECONDARY POWER, CONCRETE ENCASED, CONDUIT AND CONDUCTOR SIZE AS INDICATED ON ONE LINE DIAGRAM
L	1" AREA LIGHTING DIRECT BURIED PVC SCHEDULE 40, CONDUCTORS AS INDICATED ON SITE PLAN

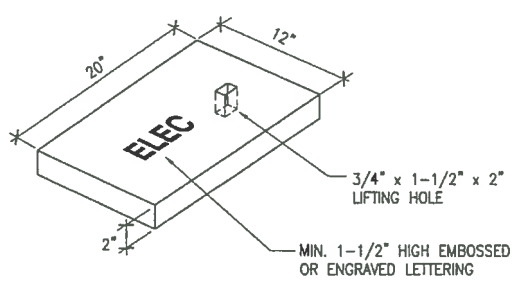

CONCRETE COVER

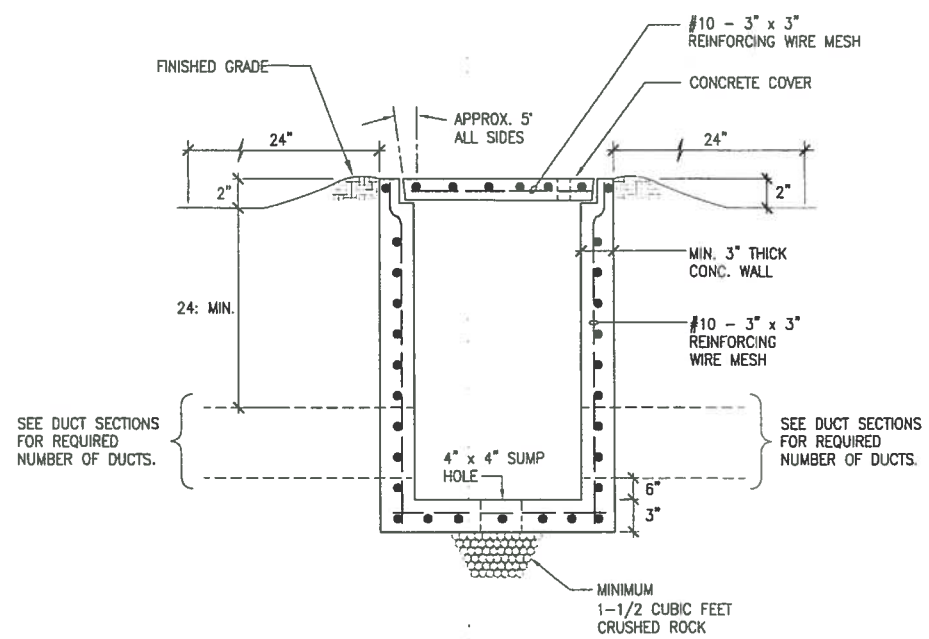

SECTION

C4 12" x 20" HANDHOLE

NOT TO SCALE

Harold Oshiro 4-14-10

FIELD POSTED RECORD DRAWINGS

FIELD POSTED RECORD DRAWINGS — Certified by: Jeff. Hirsuflige Date: December 10, 2012 Unlimited Construction Services, Inc

REVISION NO.	SYM.	DESCRIPTION	SHT.___ OF___	DATE	APPROVED: PUBLIC WORKS ADMINISTRATOR

GLENN T. KARAMATSU — LICENSED PROFESSIONAL ENGINEER — No. 4368-E — HAWAII, U.S.A.

THIS WORK WAS PREPARED BY ME OR UNDER MY SUPERVISION AND CONSTRUCTION OF THIS PROJECT WILL BE UNDER MY OBSERVATION.

PROJECT ENGINEER for ECS, Inc.

APRIL 30, 2008
EXPIRATION DATE OF THE LICENSE

DEPT. OF ACCOUNTING & GENERAL SERVICES
DIVISION OF PUBLIC WORKS
STATE OF HAWAII

KAPOLEI JUDICIARY COMPLEX
KAPOLEI, OAHU, HAWAII

DUCT AND HANDHOLE DETAILS

ECS, INC.

DESIGNED BY: MA	CHECKED BY: VM	BAGE JOB NO. 12-21-7043	DRAWING NO. E-A004
DRAWN BY: CS	APPROVED BY: GK	DATE NOV 2006	SHEET 609 OF 1021 SHTS.
SCALE: AS SHOWN			

FILE ____ DRAW ____ FOLDER ____

5/13/10-15:42 Y:\014\014 (03)\14-5\ EA004.DGN.dwg

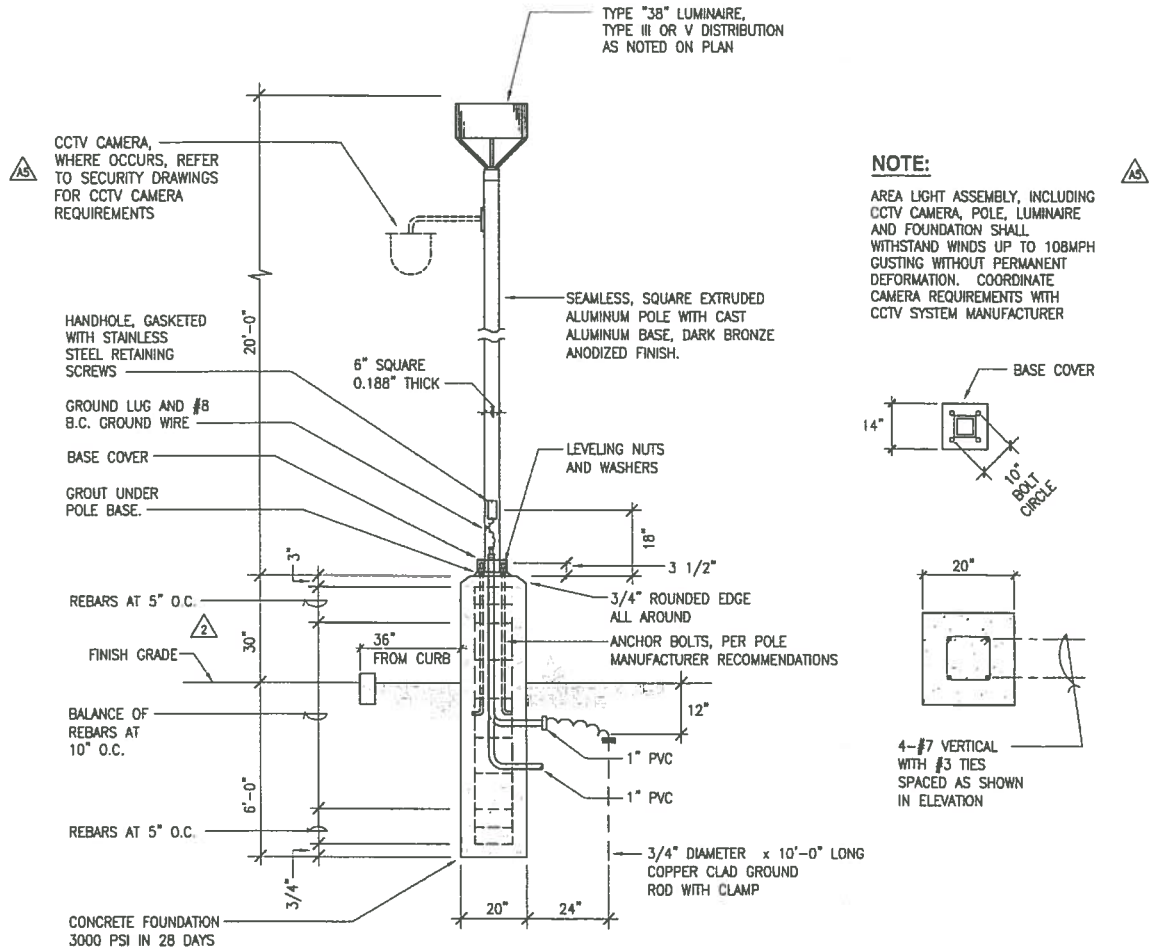

NOTE:

AREA LIGHT ASSEMBLY, INCLUDING CCTV CAMERA, POLE, LUMINAIRE AND FOUNDATION SHALL WITHSTAND WINDS UP TO 108MPH GUSTING WITHOUT PERMANENT DEFORMATION. COORDINATE CAMERA REQUIREMENTS WITH CCTV SYSTEM MANUFACTURER

A5

B1 PARKING LOT LIGHT POLE DETAIL

NOT TO SCALE

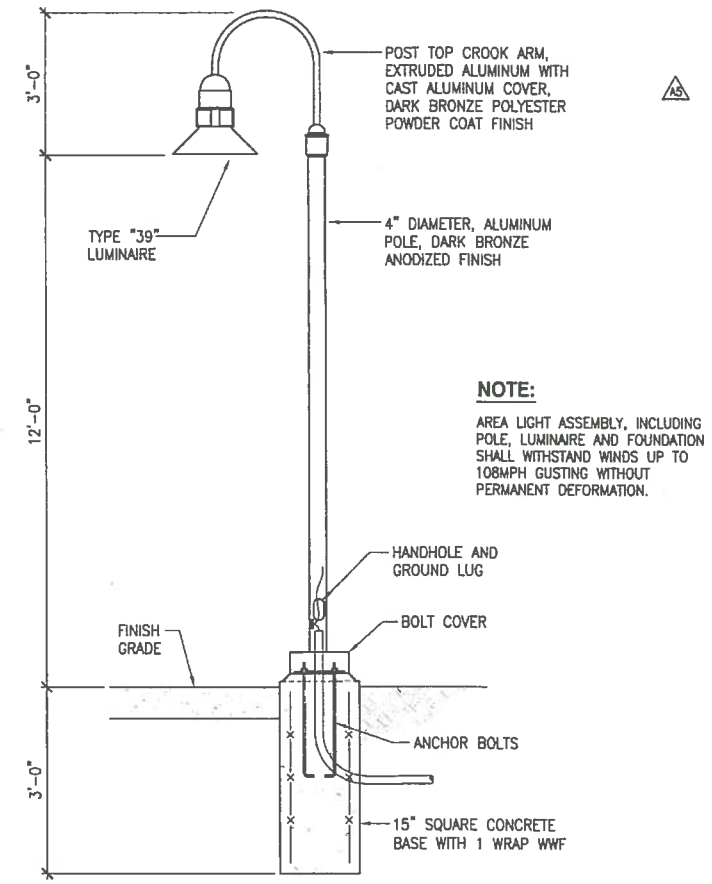

NOTE:

AREA LIGHT ASSEMBLY, INCLUDING POLE, LUMINAIRE AND FOUNDATION SHALL WITHSTAND WINDS UP TO 108MPH GUSTING WITHOUT PERMANENT DEFORMATION.

B4 WALKWAY LIGHT POLE DETAIL

NOT TO SCALE

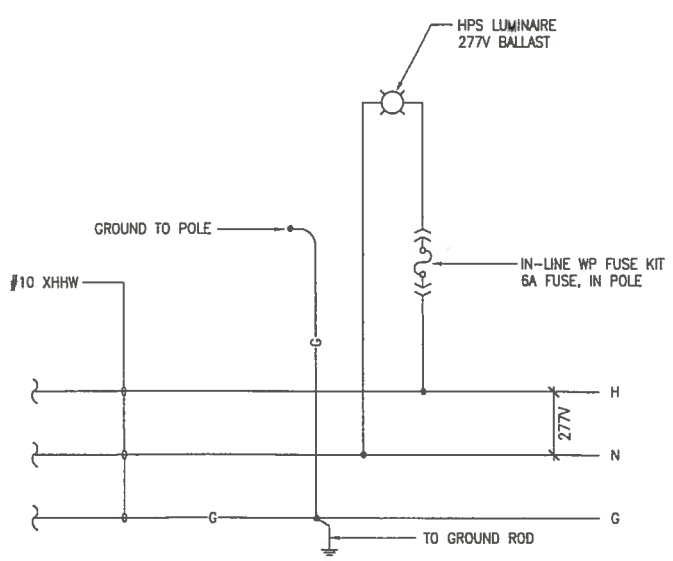

B4 TYPICAL POLE LIGHT WIRING DIAGRAM

NO SCALE

Harold Calagos 4-17-10

FIELD POSTED RECORD DRAWINGS

FIELD POSTED RECORD DRAWINGS Certified by Sr.Pl. Manager Date: December 10, 2012 Unlimited Construction Services, Inc

REVISION NO.	SYM.	DESCRIPTION	BHT.__ OF__	DATE	APPROVED: PUBLIC WORKS ADMINISTRATOR
PCD-2	2	REVISE LIGHT POLE PEDESTAL HEIGHT	148/244	10/26/07	
ADD-05	A5	REVISE POLE DETAILS	146/197	02/02/07	

GLENN T. KARAMATSU LICENSED PROFESSIONAL ENGINEER No. 4368-E HAWAII, U.S.A.

THIS WORK WAS PREPARED BY ME OR UNDER MY SUPERVISION AND CONSTRUCTION OF THIS PROJECT WILL BE UNDER MY OBSERVATION.

Glenn Karamatsu
PROJECT ENGINEER for ECS, Inc.

APRIL 30, 2008
EXPIRATION DATE OF THE LICENSE

DEPT. OF ACCOUNTING & GENERAL SERVICES
DIVISION OF PUBLIC WORKS
STATE OF HAWAII

KAPOLEI JUDICIARY COMPLEX
KAPOLEI, OAHU, HAWAII

SITE LIGHTING DETAILS

ECS, INC.		BASE JOB NO.	DRAWING NO.
DESIGNED BY: MA	CHECKED BY: VM	12-21-7043	E-A005
DRAWN BY: CS	APPROVED BY: GK	DATE	SHEET 810
SCALE: AS SHOWN		NOV 2006	OF 1021 SHTS.

FILE ____ DRAW ____ FOLDER ____

5/13/10-15:12 Y:\014\014.05\14-51 E-A005.002.dwg

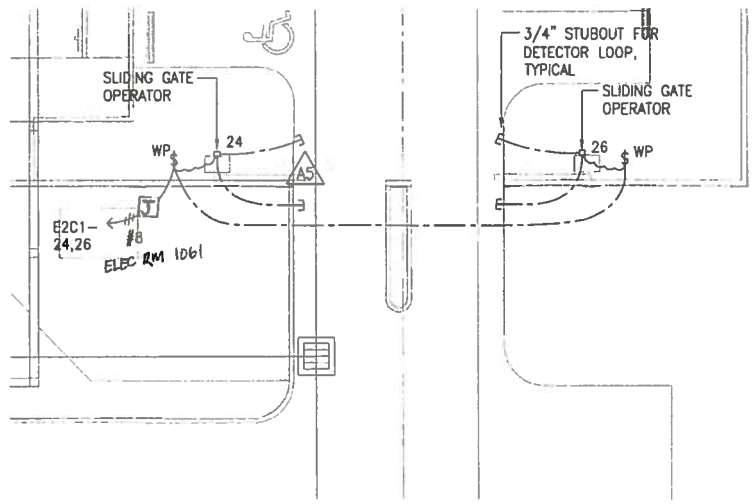

C1 PARKING GATE ELECTRICAL PLAN - JUDGE'S PARKING

SCALE: 1" = 10'

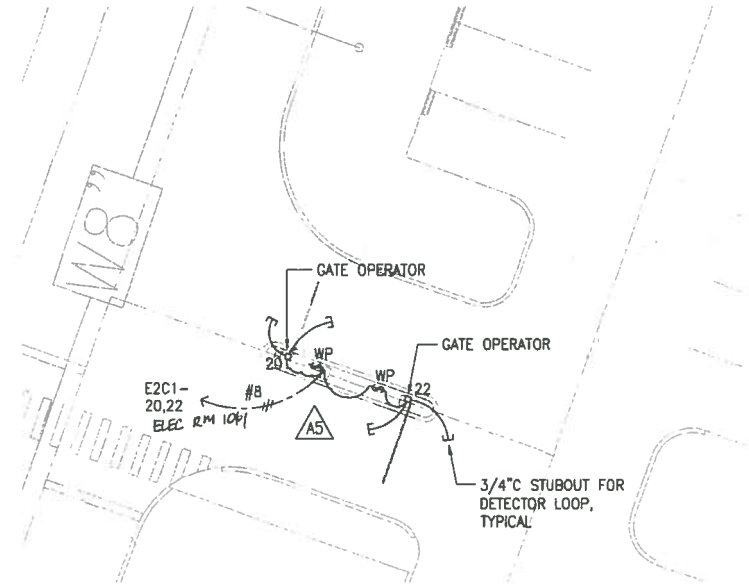

C3 PARKING GATE ELECTRICAL PLAN - STAFF PARKING

SCALE: 1" = 10'

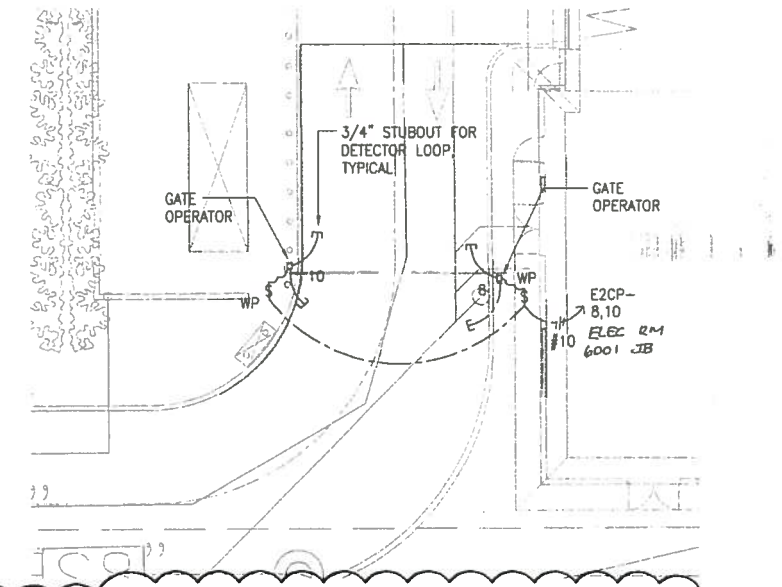

6

C4 PARKING GATE ELECTRICAL PLAN - SALLY PORT

SCALE: 1" = 10'

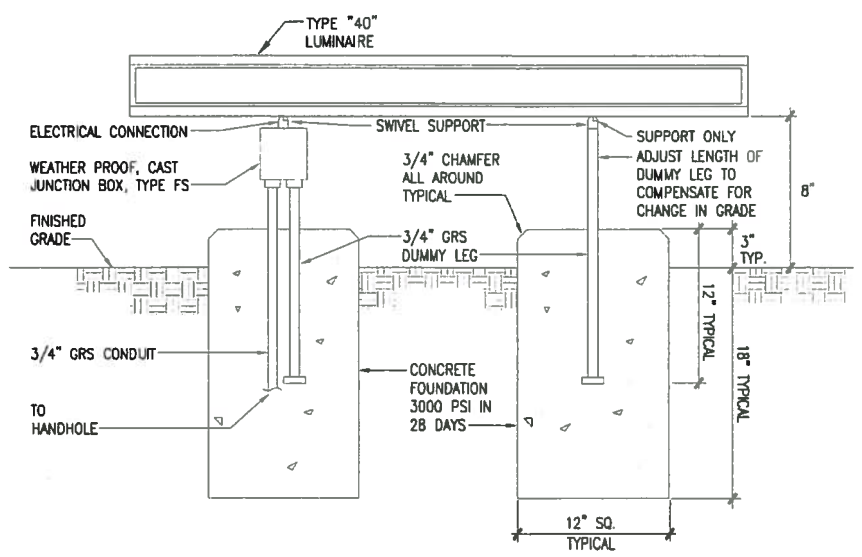

A1 SIGN LUMINAIRE DETAIL

NOT TO SCALE

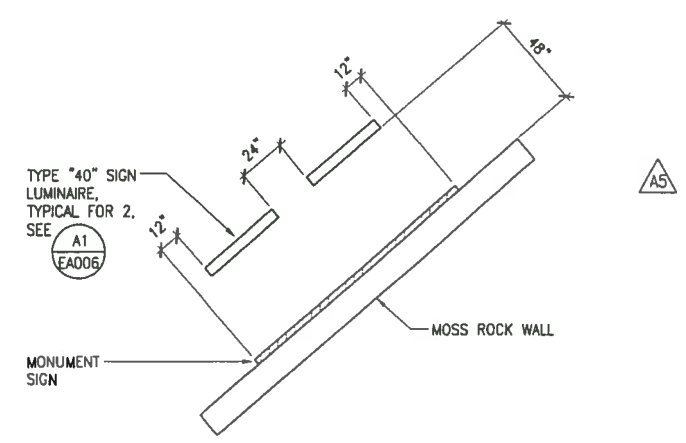

A3 MONUMENT SIGN LIGHTING PLAN

NOT TO SCALE

0 5 10 20 30

SCALE: 1"=10'

AS-BUILT DRAWINGS/SPECIFICATIONS

THIS CERTIFIES THAT THE DIMENSIONS AND DETAILS SHOWN ON THIS SHEET REFLECT THE DIMENSIONS AND DETAILS AND SPECIFICATIONS AS CONSTRUCTED IN THE FIELD.

WAHA ELECTRICAL SERVICES, INC.
Harold Wahan 14 Apr 10
Signature Date

FIELD POSTED RECORD DRAWINGS

REVISION NO.	SYM.	DESCRIPTION	SHT.__ OF__	DATE	APPROVED: PUBLIC WORKS ADMINISTRATOR
PCO-06	6	ADD DETAIL C4	20/31	06/06/08	
ADD-05	A5	ADD DETAIL A3, REVISE DETAILS C1 AND C3	147/197	02/2/07	

GLENN T. KARAMATSU
LICENSED PROFESSIONAL ENGINEER
No. 4368-E
HAWAII, U.S.A.

THIS WORK WAS PREPARED BY ME OR UNDER MY SUPERVISION AND CONSTRUCTION OF THIS PROJECT WILL BE UNDER MY OBSERVATION.

PROJECT ENGINEER for ECS, Inc.

APRIL 30, 2008
EXPIRATION DATE OF THE LICENSE

DEPT. OF ACCOUNTING & GENERAL SERVICES
DIVISION OF PUBLIC WORKS
STATE OF HAWAII

KAPOLEI JUDICIARY COMPLEX
KAPOLEI, OAHU, HAWAII

SITE ELECTRICAL DETAILS

ECS, INC.

DESIGNED BY: MA	CHECKED BY: VM	BASE JOB NO: 12-21-7043	DRAWING NO: E-A006
DRAWN BY: CS	APPROVED BY: GK	DATE: NOV 2006	SHEET 611 OF 1021 SHTS.
SCALE: AS SHOWN			

FILE ____ DRAWN ____ POLICE ____

FIELD POSTED RECORD DRAWINGS Certified by Seth Monsefiga Date: December 10, 2012 Unlimited Construction Services, Inc.

E/B/08-10:57 X:\0914\0141.003\141-51 FA006.003.dwg

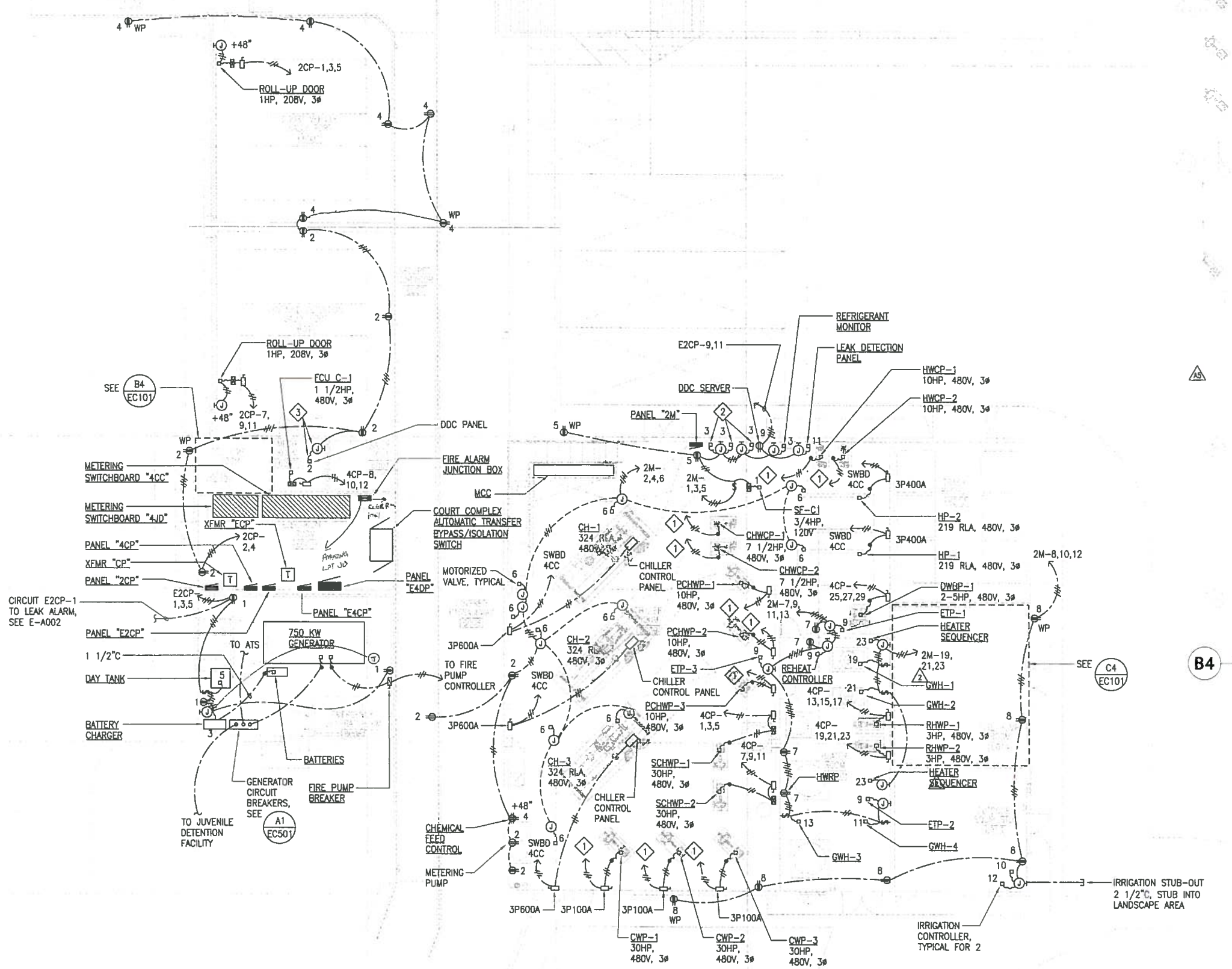

A2 CENTRAL PLANT ELECTRICAL PLAN

SCALE: 1/8" = 1'-0"

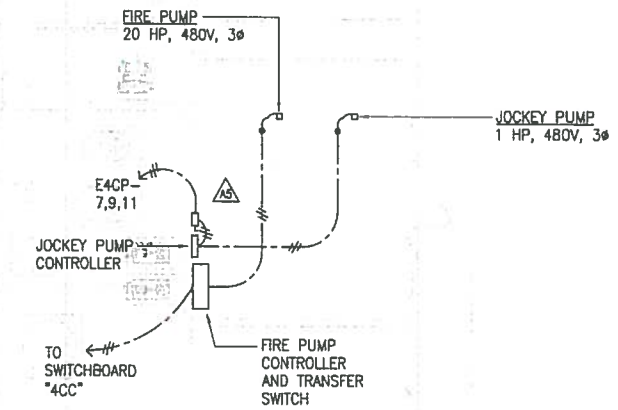

C4 FIRE PUMP ROOM ELECTRICAL PLAN

SCALE: 1/8" = 1'-0"

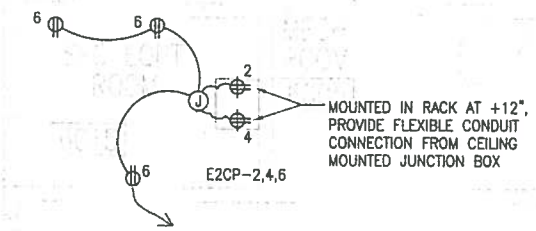

B4 SECURITY EQUIPMENT ROOM 6015 ELECTRICAL PLAN

SCALE: 1/4" = 1'-0"

NOTES:

1. TO MCC
2. DDC PANEL CONNECTION
3. PROVIDE UNDER ALTERNATE A-3

FIELD POSTED RECORD DRAWINGS

FIELD POSTED RECORD DRAWINGS Certified by: Scott Hirasaki/Date: December 10, 2012 Unlimited Construction Services, Inc.

GRAPHIC SCALE

5' 0 5' 10' 15'

1/4" = 1'-0"

5' 0 5' 10' 15' 20' 25' 30' 35' 40'

1/8" = 1'-0"

REVISION NO.	SYM.	DESCRIPTION	SHT. OF	DATE	APPROVED: PUBLIC WORKS ADMINISTRATOR
PCO-2	2	REVISE WATER HEATER AND CONTROL PANEL CIRCUITING	242/244	10/26/07	
ADC-05	A5	REVISE CIRCUITING	191/197	02/02/07	

GLENN T. KARAMATSU LICENSED PROFESSIONAL ENGINEER No. 4368-E HAWAII, U.S.A.

THIS WORK WAS PREPARED BY ME OR UNDER MY SUPERVISION AND CONSTRUCTION OF THIS PROJECT WILL BE UNDER MY OBSERVATION.

PROJECT ENGINEER for ECS, Inc.

APRIL 30, 2008

EXPIRATION DATE OF THE LICENSE

DEPT. OF ACCOUNTING & GENERAL SERVICES
DIVISION OF PUBLIC WORKS
STATE OF HAWAII

KAPOLEI JUDICIARY COMPLEX
KAPOLEI, OAHU, HAWAII

CENTRAL PLANT ELECTRICAL PLAN

ECS, INC.

DESIGNED BY: MA	CHECKED BY: VM	BASE JOB NO. 12-21-7043	DRAWING NO. E-C101
DRAWN BY: CS	APPROVED BY: GK	DATE NOV 2008	SHEET 1011 OF 1021 SHTS.
SCALE: AS SHOWN			

5/14/10-9:32 Y:\0140140S\14 51 ECI\PID\CENTRAL PLANT.dwg

INTERIM

GENERAL CONDITIONS

1999 EDITION

PUBLIC WORKS DIVISION
DEPARTMENT OF ACCOUNTING AND GENERAL SERVICES
STATE OF HAWAII

INTERIM GENERAL CONDITIONS

1999 EDITION

FOR CONSTRUCTION

State of Hawaii
Department of Accounting and General Services
Public Works Division

Printed by
State of Hawaii
First Printing March 2000

PREFACE

The State of Hawaii Procurement Code forms the basis for portions of this Interim General Conditions. The Hawaii Administration Rules Procurement Code is not physically included in this Interim General Conditions, but shall govern if any provisions used in this Interim General Conditions are not consistent with the Hawaii Administration Rules Procurement Code.

Copies of the Hawaii Administration Rules Procurement Code may be obtained from the State Procurement Office, Department of Accounting and General Services, State of Hawaii, fourth floor Kalanimoku Building Room 416, 1153 Punchbowl Street, Honolulu Hawaii.

Approved for Publication

_____

Comptroller, State of Hawaii
Department of Accounting and General Services

Approved as to Form

_____

Deputy Attorney General, State of Hawaii

TABLE OF CONTENTS

Section/Subsection Page

ARTICLE 1 - DEFINITIONS 1

ARTICLE 2 - PROPOSAL REQUIREMENTS AND CONDITIONS

2.1 Qualification of Bidders 5
2.1.1 Notice of Intention to Bid 5
2.1.2 Tax Clearance 6
2.1.3 Wrongful Refusal to Accept a Bid 6
2.2 Interpretation of Quantities in Bid Schedule . . 6
2.3 Contents of Proposal Forms 7
2.4 The Site and Proposed Contract Documents 7
2.5 Addenda and Bid Clarifications 7
2.5.3 Bid Discrepancy 7
2.6 Substitution of Materials and Equipment Before Bid Opening 7
2.6.3 Statement of Variances 8
2.6.4 Substitution Denial 8
2.7 Preparation of Proposal 8
2.8 Bid Security 8
2.9 Delivery of Proposals 9
2.10 Withdrawal or Revision of Proposal 9
2.10.1 Withdrawal of Proposals 9
2.10.2 Modification of Proposals 9
2.11 Public Opening of Proposals 9
2.12 Disqualification of Bidders 9
2.13 Protest 10

ARTICLE 3 - AWARD AND EXECUTION OF CONTRACT

3.1 Consideration of Proposals; Cancellation 10
3.2 Irregular Proposals 10
3.3 Correction of Bids and Withdrawal of Bids 11
3.4 Award of Contract 11
3.5 Cancellation of Award 11
3.6 Return of Bid Security 12
3.7 Requirement of Performance and Payment Bonds 12
3.8 Execution of the Contract 12
3.9 Failure to Execute the Contract 12
3.9.1 Before the Award 12
3.9.2 After the Award 12
3.9.3 Comptroller's Options 12
3.10 Notice to Proceed 12

ARTICLE 4 - SCOPE OF WORK

4.1 Intent of Contract, Duty of Contractor 13
4.2 Changes 13
4.2.1 Minor Changes 13
4.2.2 Oral Orders 13

Section/Subsection Page

4.2.3 Field Orders 13
4.2.4 Change Orders 14
4.3 Duty of Contractor to Provide Proposal for Changes 14
4.4 Price Adjustment 14
4.5 Allowances for Overhead and Profit 15
4.6 Payment for Deleted Material 15
4.6.1 Canceled Orders 15
4.6.2 Returned Materials 15
4.6.3 Uncancelled Materials 15
4.7 Variations in Estimated Quantities 15
4.8 Variations in Bottom Elevations 15
4.9 Differing Site Conditions 15
4.10 Utilities and Services 16
4.10.2 Unknown Utilities 16
4.10.4 Restoration of Damaged Utilities 16

ARTICLE 5 - CONTROL OF WORK

5.1 Authority of the Engineer 16
5.2 Authority of the Inspector 17
5.3 Authority of the Consultant(s) 17
5.4 Shop Drawings and Other Submittals 17
5.4.1 Shop Drawings 17
5.4.2 Submittal Variances 18
5.4.3 Review and Acceptance Process 18
5.5 Coordination of Contract Documents 19
5.5.1 Addenda 19
5.5.2 Special Conditions and Proposal 19
5.5.3 Specifications 19
5.5.4 Specification Error 19
5.5.5 Drawings 19
5.6 Interpretation of Drawings and Specifications 19
5.7 Examination of Drawings, Specifications, Project Site. 20
5.8 Cooperation Between the Contractor and the Department 20
5.8.1 Furnishing Drawings and Specifications 20
5.8.2 Superintendent 20
5.8.3 Engineering Work 20
5.8.4 Use of Structure or Improvement 21
5.9 Inspection 21
5.9.2 Authority to Suspend Operations 21
5.9.4 Federal Agency Inspection 21
5.10 Removal of Defective, Non-Conforming and Unauthorized Work 21
5.10.2 Scheduling Corrective Work 21
5.10.3 Failure to Correct Work 21
5.11 Value Engineering Incentive 22
5.11.2 Value Engineering Change Proposal 22
5.11.3 VECP Required Information 22
5.11.4 Required Use of Licensed Architect or Engineer 22
5.11.6 Acceptance of VECP 22
5.11.7 VECP Price Adjustments 23

Section/Subsection Page

5.12 Subcontracts 23
5.12.1 Substituting Subcontractors 23
5.12.2 Requesting Approval to Substitute a Subcontractor

23
5.12.4 Subcontracting 24

ARTICLE 6 - CONTROL OF MATERIALS AND EQUIPMENT

6.1 Materials and Equipment 24
6.2 Source of Supply and Quality of Materials 24
6.2.3 Engineer's Authorization to Test Materials 24
6.2.4 Unacceptable Materials 24
6.3 Substitution of Materials and Equipment After Bid Opening 24
6.3.2 Substitution After Contract Award 24
6.4 Asbestos Containing Materials 25
6.5 Test Samples 25
6.6 Material Samples 25
6.7 Non-Conforming Materials 25
6.8 Handling Materials 25
6.9 Storage of Materials 25
6.10 Property Rights in Materials 26
6.11 Assignment of Antitrust Claims for Overcharges for Goods Purchased 26

ARTICLE 7 - PROSECUTION AND PROGRESS

7.1 Prosecution of the Work 26
7.1.4 Working Prior to Notice to Proceed 26
7.2 Commencement Requirements 26
7.2.1 Identification of the Superintendent 26
7.2.2 Proposed Working Hours 26
7.2.3 Permits and Licenses 26
7.2.4 Schedule of Prices 27
7.2.5 Proof of Insurance Coverage 27
7.3 Insurance Requirements 27
7.3.1 Obligation of the Contractor 27
7.3.7 Types of Insurance 27
7.4 Permits and Licenses 28
7.5 Normal Working Hours 28
7.6 Hours of Labor 28
7.7 Prevailing Wages 29
7.7.2 Wage Rate Schedule 29
7.7.5 Posting Wage Rate Schedule 29
7.8 Failure to Pay Required Wages 29
7.9 Payrolls and Payroll Records 29
7.10 Overtime and Night Work 30
7.10.2 Overtime Notification 30
7.11 Overtime and Night Payment for State Inspection Service 30
7.11.2 Payment for Inspection Services 30
7.12 Limitations of Operations 30
7.13 Assignment or Change of Name 31

Section/Subsection Page

7.13.1 Assignment 31
7.13.3 Recognition of a Successor in Interest; Assignment 31
7.13.4 Change of Name 31
7.14 Laws to be Observed 31
7.15 Patented Devices, Materials and Processes 32
7.16 Sanitary, Health and Safety Provisions 32
7.17 Protection of Persons and Property 32
7.17.1 Safety Precautions and Programs 32
7.17.8 Emergencies 33
7.18 Archaeological Sites 33
7.19 Responsibility for Damage Claims; Indemnity 33
7.20 Character of Workers or Equipment 34
7.20.2 Character and Proficiency of Workers 34
7.20.3 Insufficient Workers 34
7.20.4 Equipment Requirements 34
7.21 Contract Time 34
7.21.2 Calculation of Contract Time 34
7.21.3 Modifications of Contract Time 34
7.21.4 Delay for Permits 35
7.21.5 Delays Beyond Contractor's Control 35
7.21.6 Delays in Delivery of Materials 35
7.21.7 Delays for Suspension of Work 36
7.21.8 Contractor Caused Delays 36
7.21.9 Reduction in Time 36
7.22 Construction Schedule 36
7.23 Statement of Working Days 36
7.24 Suspension of Work 37
7.24.1 Procedure to be Followed 37
7.24.2 Partial, Total Suspension of Work 37
7.24.3 Payment 37
7.24.4 Claims Not Allowed 37
7.25 Disputes and Claims 38
7.25.1 Required Notification 38
7.25.2 Continued Performance of Work 38
7.25.4 Requirements for Notice of Claim 38
7.25.6 Final Statement for Claim 38
7.25.10 Decision on Claim / Appeal 39
7.25.11 Payment and Interest 39
7.25.13 Waiver of Attorney's Fees 39
7.26 Failure to Complete the Work on Time 39
7.26.2 Acceptance of Liquidated Damages 40
7.26.3 Payments for Liquidated Damages 40
7.27 Termination of Contract for Cause 40
7.27.1 Default 40
7.27.2 Additional Rights and Remedies 40
7.27.3 Costs and Charges 40
7.27.4 Erroneous Termination for Cause 40
7.28 Termination for Convenience 40
7.28.1 Termination 40
7.28.2 Contractor's Obligations 40
7.28.3 Right to Construction and Goods 41
7.28.4 Compensation 41
7.29 Correcting Defects 41
7.30 Final Cleaning 41
7.31 Substantial Completion, and Final Inspection 41
7.31.1 Substantial Completion 42
7.31.2 Final Inspection 42

Section/Subsection Page

7.31.4 Revoking Substantial Completion 42
7.32 Project Acceptance Date 42
7.32.2 Protection and Maintenance 42
7.32.4 Punchlist Requirements 43
7.32.7 Failure to Correct Deficiencies 43
7.33 Final Settlement of Contract 43
7.33.1 Necessary Submissions 43
7.33.2 Failure to Submit Closing

Documents 43
7.34 Contractor's Responsibility for Work; Risk of Loss 43
7.35 Guarantee of Work 44
7.35.2 Repair of Work 44
7.35.3 Manufacturer's and Installer's Guarantee 44
7.36 Work of and Charges by Utilities 44
7.37 Right to Audit Records 44
7.38 Records Maintenance, Retention and Access . 45

ARTICLE 8 - MEASUREMENT AND PAYMENT

8.1 Measurement of Quantities 45
8.2 No Waiver of Legal Rights 45
8.3 Payment for Additional Work 46
8.3.4 Force Account Method 46
8.4 Progress and / or Partial Payments 49
8.4.1 Progress Payments 49
8.4.3 Partial Payments for Materials 49
8.5 Prompt Payment 49
8.5.3 Bona Fide Disputes 49
8.5.4 Filing Non-Payment Complaint 50
8.6 Retainage 50
8.7 Warranty of Clear Title 50
8.8 Final Payment 50
8.9 Claims Arising out of Payment for Required Work 50

Section/Subsection Page

APPENDIX - SAMPLE FORMS

Request for Substitution 55
Name of Corporation 57
Contract 59
Contractor's Bond Forms
Surety [Bid] [Proposal] Bond 63
Performance Bond - Surety 65
Performance Bond - Contractor 67
Labor and Material Payment
Bond - Surety 69
Labor and Material Payment
Bond - Contractor 71
Contractor Acknowledgment Form 73
Surety Acknowledgment Form 73
Certificate of Recycled Content 75
Value Engineering Change Proposal 77
Contractor Summary Sheet 79
Contractor Required Information 80
Estimate for Field Order or Bulletin 81
Change Order 83
Field Order 85

ARTICLE 1 - Definitions

Whenever the following terms or pronouns are used in these Bidding and Execution of Contract Requirements, and General Conditions, or in any contract documents or instruments where these Bidding and Execution of Contract Requirements, and General Conditions govern, the intent and meaning shall be interpreted as follows

1.1 **ADDENDUM (plural - Addenda)** A written or graphic document, including Drawings and Specifications, issued by the Comptroller during the bidding period which modify or interpret the bidding documents, by additions, deletions, clarifications or corrections which shall be considered and made a part of the bid proposal and the contract when executed.

1.2 **ADDITION** (to the contract sum) Amount added to the contract Sum by Change Order.

1.3 **ADMINISTRATIVE RULES** Hawaii Administrative Rules for Chapter 103-D of the Hawaii Revised Statutes.

1.4 **ADMINISTRATOR** The Public Works Administrator, Department of Accounting and General Services

1.5 **ADVERTISEMENT** A public announcement inviting bids for work to be performed or materials to be furnished.

1.6 **AMENDMENT** A written document properly executed by the Contractor and Comptroller issued to amend the existing contract between the State and the Contractor.

1.7 **BAD WEATHER DAY** When weather or other conditions prevent a minimum of four hours of work with the Contractor's normal work force on controlling items of work at the site.

1.8 **BENEFICIAL OCCUPANCY** The point of project completion when the State can use the constructed facility in whole or in part for its intended purpose even though substantial completion may not be achieved.

1.9 **BID** See PROPOSAL

1.10 **BID SECURITY** The security furnished by the bidder from which the State may recover its damages in the event the bidder breaches its promise to enter into a contract with the State and fails to execute the required bonds covering the work contemplated, if its proposal is accepted.

1.11 **BIDDER** Any individual, partnership, firm, corporation, joint venture, or other legal entity submitting, directly or through a duly authorized representative or agent, a proposal for the work contemplated.

1.12 **BIDDING DOCUMENTS** The advertisement "Notice to Contractors", or invitation to bid, instructions to bidders, proposal requirements, the bid form and the proposed Contract Documents including all addenda issued prior to receipt of Bids.

1.13 **BULLETIN** A written notice to the Contractor requesting a price and / or time proposal for contemplated changes preparatory to the issuance of a field order or change order.

1.14 **BY OR TO THE ENGINEER** To avoid cumbersome and confusing repetition of expressions in these General Conditions, it is provided that whenever the following words or words of like import are used, they shall be understood as if they were followed by the words "by the Engineer" or "to the Engineer", unless the context clearly indicates another meaning: contemplated, required, determined, directed, specified, authorized, ordered, given, designated, indicated, considered necessary, deemed necessary, permitted, reserved, suspended, established, approval, approved, disapproved, acceptable, unacceptable, suitable, accepted, satisfactory, unsatisfactory, sufficient, insufficient, rejected or condemned.

1.15 **CALENDAR DAY** Any day shown on the calendar beginning at midnight and ending at midnight the following day. If no designation of calendar or working day is made, "day" shall mean calendar day.

1.16 **CHANGE ORDER** A written order signed by the Engineer that establishes the full payment and final settlement of all claims for direct, indirect and consequential costs, including costs of delays, and establishes any adjustments to contract time related to the work covered and affected by one or more field orders, or for change work done or agreed to be done without issuance of a separate field order. A change order signed by all the parties to the contract constitutes a supplemental agreement.

1.17 **COMPLETION** See SUBSTANTIAL COMPLETION and FINAL COMPLETION.

1.18 **COMPTROLLER** The Comptroller of the State of Hawaii, Department of Accounting and General Services.

1.19 **CONSULTANT** A person, firm or corporation having a contract with the State to furnish services with respect to the project

1.20 **CONTRACT** The written agreement between the Contractor and the State of Hawaii by its Comptroller, by which the Contractor is bound to furnish all labor, equipment, and materials and to perform the specified work within the contract time stipulated, and by which the State of Hawaii is obligated to compensate the Contractor therefor at the prices set forth therein. The contract shall include the Contract Documents and also any and all amendments and change orders which are required to complete the construction in an acceptable manner.

1.21 **CONTRACT COMPLETION DATE** The calendar day on which all work on the project, required by the contract, must be completed. See CONTRACT TIME and FINAL COMPLETION.

1.22 **CONTRACT DOCUMENTS** The Contract, Addenda (which pertain to the Contract Documents, Contractor's Proposal (including Wage Schedule, List of Subcontractors and other documentation accompanying the Bid and any post bid documentation submitted prior to the Notice of Award) when attached as an exhibit to the Contract, the Notice to Proceed, the Bonds, these GENERAL CONDITIONS, the SPECIAL CONDITIONS, the Specifications and the Drawings as the same are more specifically identified in the Contract together with all written Amendments, Change Orders, Field Orders, a written order for minor changes in the work and Engineer's written interpretations and clarifications issued on or after the effective date of the Contract.

1.23 **CONTRACT PRICE** The amount designated on the face of the contract for the performance of work including allowances for extra if any.

1.24 **CONTRACT TIME** The number of working or calendar days provided in the contract for completion of the contract, exclusive of authorized time extensions. The number of days shall begin running on the effective date in the Notice to Proceed. If in lieu of providing a number of working or calendar days, the contract requires completion by a certain date, the work shall be completed by that date.

1.25 **CONTRACTOR** Any individual, partnership, firm, corporation, joint venture, or other legal entity undertaking the execution of the work under the terms of the contract with the State of Hawaii, and acting directly or through its agents, or employees.

1.26 **DEPARTMENT** The Department of Accounting and General Services, State of Hawaii (abbreviated DAGS).

1.27 **DRAWINGS (or Plans)** The contract drawings in graphic or pictorial form, which show the design, location, character, dimensions and details of the Work to be done and which shall be a part of the Contract Documents.

1.28 **ENGINEER** The Public Works Administrator, or the authorized person to act in the Administrator's behalf.

1.29 **EQUAL OR APPROVED EQUAL** Whenever this term is used in the drawings or specifications, it shall be interpreted to mean a brand or article, prequalified in accordance with Section 6.3 SUBSTITUTION OF MATERIALS AND EQUIPMENT, that may be used in place of the one specified.

1.30 **FIELD ORDER** A written order issued by the Engineer or the Engineer's authorized representative to the Contractor requiring the contract work to be performed in accordance with a change or changes in the work. A field order may (1) establish a price adjustment and/or time adjustment in an amount the Engineer believes is reasonable for the change; or (2) may declare that the Engineer does not intend to adjust contract time or price for the work; or (3) may request the Contractor to submit a proposal for an adjustment to the contract time and/or price by a certain date.

1.31 **FINAL COMPLETION** The date set by the Comptroller that all work required by the contract and any amendments or changes thereto is in full compliance with the contract.

1.32 **FORCE ACCOUNT** Term used when Work is ordered to be done without prior agreements as to lump sum or unit price cost thereof and is to be billed for at cost of labor, materials and equipment, insurances, taxes, etc., plus an agreed percentage for overhead and profit.

1.33 **GUARANTEE** Legally enforceable assurance of the duration of satisfactory performance of quality of a product or Work

1.34 **GOODS** Materials. §103D-104

1.35 **HAZARDOUS MATERIALS** Any and all radioactive materials, asbestos, polychlorinated biphenyls, petroleum, crude oil, chemicals known to cause cancer or reproductive toxicity, pollutants, contaminants, toxic substances or materials cited in Hazardous Material Laws. Abandoned motor vehicles or parts thereof are not hazardous material.

1.36 **HOLIDAYS** The days of each year which are set apart and established as State holidays pursuant to Chapter 8, Hawaii Revised Statutes.

1.37 **INSPECTOR** The person assigned by the Engineer to make detailed inspections of contract performance and materials supplied for the work.

1.38 **LAWS** All Federal, State, City and County Laws, ordinances, rules and regulations, and standard specifications, including any amendments thereto effective as of the date of the call for sealed bids.

1.39 **LIQUIDATED DAMAGES** The amount prescribed in the General Conditions, Section 7.26 FAILURE TO COMPLETE THE WORK ON TIME to be paid to the State or to be deducted from any payments due or to become due the Contractor for each working day or calendar day (as applicable) delay in completing the whole or any specified portion of the work beyond the Contract Time.

1.40 **LETTER OF AWARD** A written notice from the Comptroller to the successful bidder(s) stating that its proposal has been accepted by the State.

1.41 **MAJOR UNIT PRICE ITEM** A unit price item which, when extended on its estimated quantities in the proposal form, exceeds five percent (5%) of the

total base bid proposal less any allowance and contingent items included in the proposal.

1.42 **NON-CONFORMING WORK** Work that does not fulfill the requirements of the Contract Documents.

1.43 **NOTICE TO CONTRACTOR** The advertisement for proposals for all work or materials on which bids are required. Such advertisement will indicate the location of the work to be done or the character of the material to be furnished and the time and place of the opening of proposals.

1.44 **NOTICE TO PROCEED** A written notice from the Engineer to the Contractor advising it of the date on which it is to begin the prosecution of the Work, which date shall also be the beginning of Contract Time.

1.45 **POST CONTRACT DRAWINGS** Drawings issued after the award of the contract for the purpose of clarification and / or changes to the work indicated in the original drawings and which may be made a part of the contract.

1.46 **PROJECT ACCEPTANCE DATE** The calendar day on which the Engineer accepts the project as sufficiently completed in compliance with the contract so that the State can occupy or utilize the Work for its intended use. See SUBSTANTIAL COMPLETION.

1.47 **PROJECT CONTRACT LIMITS** (or Contract Zone) The portion of the site as delineated on the drawings which define the Contractor's primary area of operation for the prosecution of the work. It does not define the exact limits of all construction that may be required under the contract.

1.48 **PROJECT GUARANTEE** A guarantee issued by the Contractor to the State. See GUARANTEE.

1.49 **PROPOSAL** (Bid) The executed document submitted by a Bidder in the prescribed manner, in response to a request for proposals or invitation to Bid, to perform at the prices quoted, for the work specified under the contract, within the time prescribed for performance.

1.50 **PROPOSAL FORM** The form prepared by the State on which the written offer or formal bid for the work to be done is submitted by the Bidder. By submitting a bid on the proposal form, a Bidder adopts the language therein as its own.

1.51 **PUNCHLIST** A list compiled by the Engineer (or Contractor) stating work yet to be completed or corrected by the Contractor in order to substantially complete or finally complete the contract requirements.

1.52 **QUESTIONNAIRE** The specified forms on which the bidder shall furnish required information as to its ability to perform and finance the work.

1.53 **SHOP DRAWINGS** All drawings, diagrams illustrations, schedules and other data or information which are specifically prepared or assembled by or for Contractor and submitted by Contractor to illustrate some portion of the Work.

1.54 **SPECIAL CONDITIONS** Supplements or modifies the standard clauses of the GENERAL CONDITIONS setting forth conditions or requirements peculiar to the individual project under consideration, which are not thoroughly or satisfactorily covered, described or explained in these GENERAL CONDITIONS.

1.55 **SPECIFICATIONS** That portion of the Contract Documents consisting of written descriptions for materials, equipment, construction systems, standards, workmanship, directions, provisions and requirements that pertain to the method and manner of performing the work and certain administrative requirements applicable thereto.

1.56 **STATE** The State of Hawaii acting through its authorized representative.

1.57 **SUBCONTRACT** Any written agreement between the Contractor and its subcontractors which contains the conditions under which the subcontractor is to perform a portion of the work for the Contractor.

1.58 **SUBCONTRACTOR** An individual, partnership, firm, corporation, joint venture or other legal entity, as covered in Chapter 444, Hawaii Revised Statutes, which enters into an agreement with the Contractor to perform a portion of the work for the Contractor.

1.59 **SUBSTANTIAL COMPLETION** The status of the project when the Contractor has completed all the work and 1) all utilities and services are connected and working, 2) all equipment is in acceptable working condition, 3) additional activity by the Contractor to correct punchlist items as described herein will not prevent or disrupt use of the work or the facility in which the work is located, and 4) the building, structure, improvement or facility can be used for its intended purpose.

1.60 **SUPERINTENDENT** The employee of the Contractor who is charged with the responsibility of all the Work.

1.61 **SURETY** The qualified individual, firm or corporation other than the Contractor, which executes a bond with and for the Contractor to insure its acceptable performance of the contract.

1.62 **UNUSUALLY SEVERE WEATHER** Uncommonly harsh weather including but not limited to hurricanes, tornados, tropical storms and tropical depressions, or as otherwise defined in the SPECIAL CONDITIONS.

1.63 **WORK** The furnishing of all labor, materials, equipment, and other incidentals necessary or convenient for the successful completion of the

project and the execution of all the duties and obligations imposed by the contract.

1.64 **WORKING DAY** A calendar day, exclusive of Saturdays, Sundays and State-recognized legal holidays for the month in question.

ABBREVIATIONS

HAR Hawaii Administrative Rules

HRS Hawaii Revised Statutes

VECP Value Engineering cost Proposal

DOTAX State Department of Taxation

IRS Internal Revenue Service

BIDDING AND EXECUTION OF CONTRACT REQUIREMENTS

ARTICLE 2 - Proposal Requirements and Conditions

2.1 QUALIFICATION OF BIDDERS Prospective bidders must be capable of performing the work for which bids are invited, and must be capable of entering into a public contract of $25,000 or more.

2.1.1 Notice of Intention to Bid

2.1.1.1 In accordance with Section 103D-310, Hawaii Revised Statutes, and Section 3-122-108, Hawaii Administrative Rules, a written notice of intention to bid must be filed for the construction of any public building or public work when the bid is $25,000 or more. A written notice of intention to bid need not be filed for the mere furnishing and installing of furniture, equipment, appliances, material and any combination of these items when a Contractor's license is not required under Chapter 444 of the Hawaii Revised Statues, as amended, and the rules and regulations of the Contractor's License Board.

2.1.1.2 The written notice must be addressed to the Comptroller, State of Hawaii, who is the officer charged with letting the contract. The words, "**INTENTION TO BID**" must be clearly written or typed on the face of the envelope containing the written notice of intention to bid. The notice may be faxed, hand carried or mailed to the office indicated in the Notice to Contractors. Submitting the intention to bid via fax is acceptable only to the Oahu office.

2.1.1.3 The written notice must be received by the office(s) indicated in the Notice to Contractors no later than 2:00 p.m. on the 10th calendar day prior to the day designated for opening bids. If the 10th calendar day prior to the day designated for opening bids is a Saturday, Sunday, or legal State holiday, then the written notice must be received by the Department no later than 2:00 p.m. on the last working day immediately prior to said Saturday, Sunday, or legal State holiday. The written notice will be time stamped when received by said office. The time designated by the time stamping device in said office shall be official. If the written notice is hand carried, then the bearer is responsible to ensure that the notice is time stamped by said office. If the notice is faxed, the time of receipt by the Department fax machine shall be official.

2.1.1.4 It is the responsibility of the prospective bidder to ensure that the written notice of intention to bid is received in time and the Department assumes no responsibility for failure of timely delivery caused by the prospective bidder or by any method of conveyance chosen by the prospective bidder.

2.1.1.5 If two (2) or more prospective bidders desire to bid jointly as a joint venture on a single project, they must file an affidavit of joint venture with their notice of intention to bid. Such affidavit of joint venture will be valid only for the specific project for which it is filed. No further license is required when all parties to the joint venture possess current and appropriate contractor's licenses. Joint ventures are required to be licensed in accordance with Chapter 444 of the Hawaii Revised Statutes, as amended, and the rules and regulations of the Contractor's License Board when any party to the joint venture agreement does not hold a current or appropriate contractor's license. The joint venture must register with the office of the Director of Commerce and Consumer Affairs in accordance with Chapter 425 of the Hawaii Revised Statutes, as amended.

2.1.1.6 No persons, firm or corporation may bid where (1) the person, firm, or corporation, or (2) a corporation owned substantially by the person, firm, or corporation, or (3) a substantial stockholder or an officer of the corporation, or (4) a partner or substantial investor in the firm is in arrears in any payment owed to the State of Hawaii or any of its political subdivisions or is in default of any obligation to the State of Hawaii or to all or to any of its political subdivisions, including default as a surety or failure to perform faithfully and diligently any previous contract with the Department.

2.1.1.7 The Comptroller may, in accordance with Section 103D-310 Hawaii Revised Statutes, require the prospective Bidder to submit answers to questions contained in the STANDARD QUALIFICATION QUESTIONNAIRE FOR PROSPECTIVE BIDDERS ON PUBLIC WORKS CONTRACTS, on the form provided by the Department, properly executed and notarized, setting forth a complete statement of the experience of such prospective Bidder and its organization in performing similar work and a statement of the equipment proposed to be used, together with adequate proof of the availability of such equipment, at least two (2) working days prior to the time advertised for the opening of bids. If the information in the questionnaire proves satisfactory, the Bidder's proposal will be received. All information contained in the answers to the questionnaire shall be kept confidential. The questionnaire will be returned to the Bidder after it has served its purpose.

2.1.1.8 If upon review of the Questionnaire, or otherwise, the Bidder appears not fully qualified or able to perform the intended work, the Comptroller shall, after affording the Bidder an opportunity to be heard and if still of the opinion that the Bidder is not fully qualified to perform the work, refuse to receive or to consider any bid offered by the prospective Bidder.

2.1.1.9 Failure to complete and submit the prequalification questionnaire by the designated deadline will be sufficient cause for the Department to disqualify a prospective Bidder.

2.1.2 Tax Clearance § 103D -328 HRS)

2.1.2.1 Contractors are required to provide both state and federal tax clearances as a prerequisite to entering into a public contract of $25,000 or more. To meet this requirement, all Bidders shall submit valid tax clearances with their bid proposals when the bid is $25,000 or more. An additional tax clearance will be required before final payment can be made.

2.1.2.2 Tax clearances may be obtained by completing the Tax Clearance Application (Form A-6) and submitting it to the Hawaii State Department of Taxation (DOTAX) or the

Internal Revenue Service (IRS). The application may be obtained from the DOTAX, the IRS, or the Public Works Division, Kalanimoku Building, Room 422, 1151 Punchbowl Street, Honolulu, Hawaii. The application may be mailed in or walked in to either the DOTAX or the IRS. Both tax agencies encourage the use of their mail-in process, which should be completed within twenty-one (21) calendar days. Tax clearance certificates will be issued to the applicant upon determination that the applicant has filed all tax returns due, and has paid all amounts owing on such returns, including penalty and interest.

2.1.2.3 Only original tax clearance certificates or certified copies will be accepted for this purpose. Failure to submit the required tax clearance certificates may be sufficient grounds for the Department to refuse to receive or consider the prospective bidder's proposal.

2.1.2.4 Tax clearance certificates are valid for six (6) months. The six-month period will begin with the later approval date stamped on the tax clearance. An original copy of a tax clearance that bears an original green certified copy stamp will be accepted by the Department for final payment. The period of validity is two months.

2.1.2.5 The tax clearances submitted with the bid proposals must be valid on the solicitation's first legal advertisement date or any date thereafter up to the bid opening date. Valid tax clearances submitted with the proposal will remain valid for the contract award and encumbrance.

2.1.2.6 Any person, firm or corporation that is not presently doing business in the State of Hawaii and submits a Notice of Intention to Bid must submit along with said Notice of Intention to Bid a certified letter stating that said person, firm or corporation is not doing business in the State of Hawaii and is not in default of any obligations due to the State or any of its political subdivisions.

2.1.2.7 If a business cannot obtain a tax clearance certificate because of tax delinquencies, it may submit a "special letter" from DOTAX and/or the IRS. The "special letter" may only be obtained if (1) the business has an existing installment agreement with the tax agency, or (2) the delinquency is the subject of an administrative or judicial appeal. The bidder is cautioned that the "special letter" from the IRS must be certified by DOTAX. All conditions applied to tax clearance certificates for this purpose are applicable to these "special letters". Instructions to obtain the "special letter" are available from each respective tax agency.

2.1.2.8 Various combinations of tax clearance certificates and "special letters" are acceptable for this purpose as follows:

(a) Tax clearance certificate signed by both tax agencies;

(b) Individual tax clearance certificates from each tax agency, respectively;

(c) Tax clearance certificate from one tax agency and a "special letter" from the other tax agency;

(d) "Special letters" from both tax agencies.

2.1.3 Wrongful Refusal to Accept a Bid - In the event the Comptroller, for any reason, wrongfully refuses to accept what would otherwise be a responsive and responsible lowest bid, the exclusive remedy for such lowest bidder shall be the recovery of the reasonable actual costs of preparing the bid. No other bidder shall have any claim for damages. Refer to 2.13 PROTEST.

2.2 INTERPRETATION OF QUANTITIES IN BID SCHEDULE

2.2.1 When quantities for individual items of work are listed in the proposal form for which respective unit prices are asked, said quantities are estimated or approximate and are to be used by the Department only for the purpose of comparing on a uniform basis bids offered for the work. The Department does not, expressly or by implication, agree that the actual quantity of work will correspond therewith.

2.2.2 After determining the low bidder by comparison of bids submitted in accordance with the proposal form and Section 3.1 CONSIDERATION OF PROPOSALS; CANCELLATION in these specifications, the quantities of unit price items of work may increase or decrease.

2.2.3 On unit price bids, payment will be made only for the actual number of units incorporated into the finished project at the unit price bid, subject to Section 4.7 VARIATIONS IN ESTIMATED QUANTITIES.

2.3 CONTENTS OF PROPOSAL FORMS

2.3.1 Prospective bidders will be furnished with proposal forms giving the location, description, and the contract time of the work contemplated for which a lump sum bid price is asked or containing a schedule of items, together with estimated quantities of work to be performed and materials to be furnished, for which unit bid prices and/or lump sum bid prices are asked.

2.3.2 All papers bound with or attached to the proposal form shall be considered a part thereof and shall not be detached or altered when the proposal is submitted.

2.3.3 The drawings, specifications and other documents designated in the proposal form, will also be considered a part thereof whether attached or not.

2.3.4 By submitting a bid on the proposal form, a bidder accepts the language therein as its own.

2.4 THE SITE AND PROPOSED CONTRACT DOCUMENTS

2.4.1 The Bidder shall examine carefully the Project Site contemplated and the proposal, drawings, specifications, supplemental specifications, SPECIAL CONDITIONS, and any documents or items referenced therein and contract and bond forms therefore. The submission of a bid shall be considered as a warranty that the Bidder has made such examination and is informed of the conditions to be encountered in performing the Work and of the requirements of the drawings, specifications, supplemental specifications, SPECIAL CONDITIONS and any documents and items referenced therein, and contract and bonds.

2.5 ADDENDA AND BID CLARIFICATIONS

2.5.1 The terms and requirements of the bid documents (i.e. drawings, specifications and other bid and contract documents) cannot be changed prior to the bid opening except by a duly issued addenda or bid clarification.

2.5.2 The Department may alter, increase or decrease the scope of the work or the contract time, provisions and conditions by issuing a written addendum which sets forth such alterations, increase or decrease.

2.5.3 **Bid Discrepancy** - If a bidder discovers what it considers to be a discrepancy, ambiguity, omission or doubt as to the meaning of drawings, specifications and any other bid or contract documents, the bidder shall request in writing no later than 14 days before the bids are opened.

2.5.4 Addenda to the bid documents will be provided to all prospective bidders at the respective offices furnished for such purposes. Each addendum shall be an addition to the Contract Documents.

2.5.5 Upon providing an addenda, all bidders shall be deemed to be on notice of the information therein whether or not the addendum or bid clarification is actually received. All addenda and bid clarifications so issued shall become part of the Contract Documents.

2.5.6 No claim for additional compensation and/or time for performance will be allowed if the Contractor discovered, or in the exercise of reasonable care, should have discovered a discrepancy, ambiguity, omission or doubt for which an interpretation was not requested.

2.6 SUBSTITUTION OF MATERIALS AND EQUIPMENT BEFORE BID OPENING

2.6.1 Brand names of materials or equipment are specified or shown on the drawings to indicate a quality, style, appearance or performance and not to limit competition. The Bidder shall base its bid on one of the specified brand names unless alternate brands are qualified as equal or better in an addendum. Qualifications of such proposed alternate brands shall be submitted in writing and addressed to the Public Works Administrator. The face of the envelope containing the request must be clearly marked "SUBSTITUTION REQUEST". The request may be hand carried to the Public Works Division, 4th Floor of the Kalanimoku Building, Room 426, 1151 Punchbowl Street or mailed to the Public Works Division, P.O. Box 119, Honolulu, Hawaii 96810. In either case, the written request must be received by the Public Works Division no later than the time and date specified in the SPECIAL CONDITIONS. The written request will be time stamped by the Public Works Division. For the purpose of this section, the time designated by the time stamping device in the Public Works Division shall be official. If the written request is hand carried, the bearer is responsible to ensure that the request is time stamped by the Public Works Division.

2.6.2 Submit three (3) sets of the written request, technical brochures, and a statement of variances. Refer to the Appendix for the Sample "Request for Substitution."

2.6.3 **Statement of Variances** - The statement of variances must list all features of the proposed substitution which differ from the drawings, specifications and / or product(s) specified and must further certify that the substitution has no other variant features. The brochure and information submitted shall be clearly marked showing make, model, size, options, etc., and must include sufficient evidence to evaluate each feature listed as a variance. A request will be denied if submitted without sufficient evidence. If after installing the substituted product, an unlisted variance is discovered, Contractor shall immediately replace the product with a specified product all at no cost to the State

2.6.4 **Substitution Denial** - Any substitution request not complying with the above requirements will be denied. Substitution requests sent to other agencies and received by the Public Works Division after the deadline above will be denied.

2.6.5 An addendum shall be issued to inform all prospective bidders of any accepted substitution in accordance with Section 2.5 ADDENDA AND BID CLARIFICATIONS.

2.6.6 For substitutions of materials and equipment after issuance of the Letter of Award, refer to Section 6.3 SUBSTITUTION OF MATERIALS AND EQUIPMENT AFTER BID OPENING.

2.7 PREPARATION OF PROPOSAL

2.7.1 The Bidder's proposal must be submitted on the proposal form furnished by the Department. The proposal must be prepared in full accordance with the instructions thereon. The Bidder must state, both in words and numerals, the lump sum price or total sum bid at which the work contemplated is proposed to be done. These prices must be written in ink or typed. In case of a discrepancy between the prices written in words and those written in figures, the words shall govern over the figures. The Bidder shall sign the proposal in the spaces provided with ink. By submitting a bid, the Bidder adopts the language of the proposal as its own.

2.7.2 If the proposal is made by an individual, the person's name and post office address must be shown in the space provided. If made by a partnership the name and post office address of each member of the partnership must be shown and the proposal signed by all partners or evidence in the form of a partnership agreement must be submitted showing the authority of the partner to enter, on behalf of said partnership, into contract with the State. If made by a corporation the proposal must show the name, titles, and business address of the president, secretary and treasurer and also evidence in the form of a corporate resolution must be submitted showing the authority of the particular corporate representative to enter on behalf of said corporation into contract with the State. If made by a joint venture the name and post office address of each member of the individual firm, partnership or corporation comprising the joint-venture must be shown with other pertinent information required of individuals, partnerships or corporations as the case may be. The proposal must be signed by all parties to the joint-venture or evidence in the form of a Joint-Venture Agreement must be submitted showing the authority of the joint-venture's representative to enter on behalf of said joint-venture into contract with the State.

2.7.3 Pursuant to the requirements of Section 103D-302, HRS, each Bidder shall include in its bid the name of each person or firm to be engaged by the Bidder on the project as joint contractor or subcontractor indicating also the nature and scope of work to be performed by such joint contractor and/or subcontractor and their respective contractor's license number. A joint contractor or subcontractor performing less than or equal to one percent of the total bid amount is not required to be listed in the proposal. The Bidder shall be solely responsible for verifying that their joint contractor or subcontractor has the proper license at the time of the submitted bid.

2.8 BID SECURITY §3-122-223(d) HAR

2.8.1 Subject to the exceptions in Section 3-122-223(d) HAR, all lump sum bids of $25,000 and higher, or lump sum base bids including alternates of $25,000 and higher, that are not accompanied by bid security are non-responsive. Bid security shall be one of the following: §3-122-222(a) HAR

2.8.1.1 Surety bid bond underwritten by a company licensed to issue bonds in this State which shall be substantially in the form of the Surety Bid Bond form in the Appendix; or

2.8.1.2 Legal Tender; or

2.8.1.3 Certificate of Deposit; Credit Union share certificate; or cashier's, treasurer's, teller's or official check drawn by, or a certified check accepted by, and payable on demand to the State by a bank, a savings institution, or credit union insured by the Federal Deposit Insurance Corporation or the National Credit Union Administration.

(a) These instruments may be utilized only to a maximum of $100,000.

(b) If the required security or bond amount totals over $100,000, more than one instrument not exceeding $100,000 each and issued by different financial institutions shall be accepted.

(c) **CAUTION** - Bidders are cautioned that certificates of deposit or share certificates with an early withdrawal penalty must have a face value sufficient to cover the maximum penalty amount in addition to the proposal guaranty requirement. If the certificate is made out to two names, the certificate must be assigned unconditionally to the Comptroller.

2.8.2 Unless otherwise stated, the bid security shall be in an amount equal to at least five percent (5%) of the lump sum bid or lump sum base bid including alternates or in an amount required by the terms of the federal funding, where applicable.

2.8.3 If the Bidder is a corporation, evidence in the form of a corporate resolution, authorizing the corporate representative to execute the bond must be submitted with the proposal. (See sample in Appendix.) If the Bidder is a partnership, all partners must sign the bond or evidence in the form of a partnership agreement must be submitted showing the authority of the partner.

2.8.4 If the Bidder is a joint -venture, all parties to the joint venture must sign the bond; provided, that one party to the joint-venture may sign on behalf of the joint-venture if evidence in the form of a joint-venture agreement or power of attorney, is submitted showing the authority of the signatory to sign the bond on behalf of the joint-venture.

2.8.5 In the case where the award will be made on a group or item basis, the amount of bid security shall be based on the total bid for all groups or items submitted.

2.8.6 Bidders are cautioned that surety bid bonds which place a limit in value to the difference between the bid amount and the next acceptable bid, such value not to exceed the purported amount of the bond, are not acceptable. Also, surety bid bonds which place a time limit on the right of the State to make claim other than allowed by statutes or these GENERAL CONDITIONS are not acceptable. Bidders are hereby notified that a surety bid bond containing such limitation(s) is not acceptable and a bid accompanied by such surety bid bond will be automatically rejected.

2.9 DELIVERY OF PROPOSALS - The entire proposal shall be placed together with the bid security, in a sealed envelope no smaller than 9-1/2" x 12" so marked as to indicate the identity of the project, the project number, the date of bid opening and the name and address of the bidder and then delivered as indicated in the Notice to Contractors. Bids which do not comply with this requirement may not be considered. Proposals will be received up to the time fixed in the public notice for opening of bids and must be in the hands of the official by the time indicated. The words "SEALED BID" must be clearly written or typed on the face of the sealed envelope containing the proposal and bid security.

2.10 WITHDRAWAL OR REVISION OF PROPOSAL - may be modified prior to the deadline to submit the offers by any of the following documents.

2.10.1 Withdrawal of Proposals:

2.10.1.1 A signed, written notice received in the office designated in the solicitation; or

2.10.1.2 A written notice faxed to the office designated in the solicitation; or

2.10.1.3 A telegraphic message received by telephone by the office designated in the solicitation from the receiving telegraph company office, provided the telegraph company confirms the telephone message by sending a written copy of the telegram showing that the message was received at such office prior to the time and date set for the opening.

2.10.2 Modification of Proposals:

2.10.2.1 A written notice received in the office designated in the solicitation, stating that a modification to the offer is submitted; and

2.10.2.2 The actual modification sealed securely in a separate envelope or container, accompanying the written notice.

2.11 PUBLIC OPENING OF PROPOSALS - Proposals will be opened and read publicly at the time and place indicated

in the Notice to Contractors. Bidders, their authorized agents and other interested parties are invited to be present.

2.12 DISQUALIFICATION OF BIDDERS - Any one or more of the following causes will be considered as sufficient for the disqualification of a Bidder and the rejection of its proposal or proposals:

2.12.1 Non-compliance with Section 2.1 QUALIFICATION OF BIDDERS.

2.12.2 Evidence of collusion among bidders.

2.12.3 Lack of responsibility and cooperation as shown by past work such as failing to complete all of the requirements to close the project within a reasonable time or engaging in a pattern of unreasonable or frivolous claims for extra compensation.

2.12.4 Being in arrears on existing contracts with the State of Hawaii, or having defaulted on a previous contract with the State of Hawaii.

2.12.5 Lack of proper equipment and/or sufficient experience to perform the work contemplated, as revealed by the Standard Questionnaire and Financial Statement for Bidders.

2.12.6 No contractor's license or a contractor's license which does not cover type of work contemplated.

2.12.7 More than one proposal for the same work from an individual, firm, partnership, corporation or joint venture under the same or different name.

2.12.8 Delivery of bids after the deadline specified in the advertisement calling for bids.

2.12.9 Failure to pay, or satisfactorily settle, all bills overdue for labor and materials of former contracts in force at the time of issuance of proposal forms.

2.12.10 Debarment or suspension pursuant to the provisions of Chapters 103D, 104 and 444, Hawaii Revised Statutes, as amended.

2.13 PROTEST

2.13.1 Protests shall be adjudicated in accordance with §103D-701, HRS and as amended.

2.13.2 No Protest based upon the contents of the solicitation shall be considered unless it is submitted in writing to the Comptroller, State of Hawaii prior to the date set for the receipt of proposals.

2.13.3 A protest of an award or proposed award pursuant to §103D-302 or §103D-303, HRS, shall be submitted in writing to the Comptroller within five (5) working days after the posting of the award of the Contract.

2.13.4 In addition to any other relief, when a protest is sustained and the protestor should have been awarded the contract under the solicitation but is not, then the protestor shall be entitled to the actual costs reasonably incurred in connection with the solicitation, including bid or proposal preparation costs but not attorney's fees.

ARTICLE 3 - Award and Execution of Contract

3.1 CONSIDERATION OF PROPOSALS; CANCELLATION - After the proposals are opened and read, the figures will be extended and/or totaled in accordance with the bid prices of the acceptable proposals and the totals will be compared and the results of such comparison shall be made public. In the event of a tie bid, the low bidder shall be determined by lot. In the comparison of bids, words written in the proposals will govern over figures and unit prices will govern over totals. Until the award of the contract, the Department may cancel the solicitation, reject any and all proposals in whole or part and may waive any defects or technicalities whenever such action is deemed to be in the best interest of the State.

3.2 IRREGULAR PROPOSALS - Proposals will be considered irregular and may be rejected for the following reasons:

3.2.1 If the proposal is unsigned.

3.2.2 If bid security is not in accordance with Section 2.8 BID SECURITY.

3.2.3 If proposal is on a form other than that furnished by the Department; or if the form is altered or any part thereof detached.

3.2.4 If the proposal shows any non-compliance with applicable law, alteration of form, additions not called, conditional bids, incomplete bids, non initialed erasures, other defects, or if the prices are obviously unbalanced.

3.2.5 If the Bidder adds any provisions reserving the right to accept or reject an award.

3.2.6 If the Bidder adds any provisions reserving the right to enter into a contract pursuant to an award.

3.2.7 When a proposal is signed by an officer or officers of a corporation and a currently certified corporate resolution authorizing such signer(s) to submit such proposal is not submitted with the proposal or when the proposal is signed by an agent other than the officer or officers of a corporation or a member of a partnership and a power of attorney is not submitted with the proposal.

3.2.8 Where there is an incomplete or ambiguous listing of joint contractors and/or subcontractors the proposal may be rejected. All work which is not listed as being performed by joint contractors and/or subcontractors must be performed by the bidder with its own employees. Additions to the list of joint contractors or subcontractors will not be allowed. Whenever there is a doubt as to the completeness of the list, the Bidder will be required to submit within five (5) working days, a written confirmation that the work in question will be performed with its own work force. Whenever there is more than one joint contractor and/or subcontractor listed for the same item of work,

the Bidder will be required to either confirm in writing within five (5) working days that all joint contractors or subcontractors listed will actually be engaged on the project or obtain within five (5) working days written releases from those joint contractors and/or subcontractors who will not be engaged.

3.2.9 If in the opinion of the Comptroller, the Bidder and its listed subcontractors do not have the contractor's licenses or combination of contractor's licenses necessary to complete all of the work.

3.3 CORRECTION OF BIDS AND WITHDRAWAL OF BIDS §3-122-31 HAR

3.3.1 Corrections to bids after bid openings but prior to award may be made under the following conditions:

3.3.1.1 If the mistake is attributable to an arithmetical error, the Comptroller shall so correct the mistake. In case of error in extension of bid price, the unit price shall govern.

3.3.1.2 If the mistake is a minor informality which shall not affect price, quantity, quality, delivery, or contractual conditions, the Bidder shall request correction by submitting proof of evidentiary value which demonstrates that a mistake was made. The Comptroller shall prepare a written approval or denial in response to this request. Examples of such mistakes include:

(a) Typographical errors;

(b) Transition errors;

(c) Failure of a Bidder to sign the bid, but only if the unsigned bid is accompanied by other material indicating the Bidder's intent to be bound.

3.3.1.3 For reasons not allowable under paragraphs 3.3.1.1 and 3.3.1.2 when the Comptroller determines that the correction or waiver of an obvious mistake is in the best interest of the Department or is warranted for the fair treatment of other bidders.

3.3.2 Withdrawal of bids after bid opening but prior to award may be made when the bid contains a mistake attributable to an obvious error which affects price, quantity, quality, delivery, or contractual conditions, and the bidder requests withdrawal by submitting proof of evidentiary value which demonstrates that a mistake was made. The Comptroller shall prepare a written approval or denial in response to this request.

3.3.3 Correction or withdrawal of bids after award is not permissible except in response to a written withdrawal or correction request by the Contractor, and the Comptroller makes a written determination that the Department's procurement practices and policies would not be materially affected by such correction or withdrawal.

3.4 AWARD OF CONTRACT

3.4.1 The award of contract, if it be awarded, will be made within sixty (60) consecutive calendar days after the opening of the proposals to the lowest responsible and responsive Bidder (including the alternate or alternates which may be selected by the Comptroller in the case of alternate bids) whose proposal complies with all the requirements prescribed, but in no case will an award be made until all necessary investigations are made. The successful Bidder will be notified, by letter mailed to the address shown on the proposal, that its bid has been accepted and that it has been awarded the contract.

3.4.2 If the contract is not awarded within the sixty (60) days noted in paragraph 3.4.1 above, the Department may request the successful Bidder to extend the time for the acceptance of its bid. The Bidder may reject such a request without penalty; and in such case, the Department may at its sole discretion make a similar offer to the next lowest responsive and responsible bidder and so on until a bid is duly accepted or until the Department elects to stop making such requests.

3.4.3 No contract will be awarded to any person or firm suspended or debarred under the provisions of Chapters 103D, 104 and Chapter 444, Hawaii Revised Statutes as amended.

3.4.4 The contract will be drawn on the forms furnished by the Comptroller. The contract will not be binding on the Department until all required signatures have been affixed thereto and written certification that funds are available for the work has been made.

3.5 CANCELLATION OF AWARD - The Department reserves the right to cancel the award of any contract at any time before the execution of said contract by all parties. The exclusive remedy to the awardee for such cancellation shall be payment of the reasonable bid preparation costs and the reimbursement of any direct expenses incurred as directed in the Notice of Award. Such cancellation will not incur any liability by the Department to any other Bidder.

3.6 RETURN OF BID SECURITY - All bid securities, except those of the four (4) lowest Bidders, will be returned following the opening and checking of the proposals. The retained bid securities of the four lowest Bidders will be returned within five (5) working days following the complete execution of the contract.

3.7 REQUIREMENT OF PERFORMANCE AND PAYMENT BONDS

3.7.1 Performance and Payment Bonds shall be required for contracts $25,000 and higher. At the time of the execution of the contract, the successful Bidder shall file good and sufficient performance and payment bonds on the form furnished by the Department (see Appendix), each in an amount equal to one hundred percent (100%) of the amount of the contract price unless otherwise stated in the solicitation of bids. Acceptable performance and payment bonds shall be limited to the following:

3.7.1.2 Surety bonds underwritten by a company licensed to issue bonds in this State; or

3.7.1.3 A certificate of deposit; credit union share certificate; or cashier's, treasurer's, teller's or official check drawn by, or a certified check accepted by, and payable on demand to the State by a bank, a savings institution, or credit union insured by the Federal Deposit Insurance Corporation or the National Credit Union Administration.

(a) These instruments may be utilized only a maximum of $100,000.

(b) If the required security or bond amount totals over $100,000, more than one instrument not exceeding $100,000 each and issued by different financial institutions shall be acceptable.

3.7.2 If the Contractor fails to deliver the required performance and payment bonds, the contractor's award shall be canceled, the Department shall have the remedies provided under Section 3.9 FAILURE TO EXECUTE THE CONTRACT and award of the contract shall be made to the next lowest responsible and responsive bidder.

3.8 EXECUTION OF THE CONTRACT

3.8.1 The contract shall be signed by the successful bidder and returned, together with satisfactory performance and payment bonds, within ten (10) calendar days after the bidder is awarded the contract for execution or within such further time as the Comptroller may allow. No proposal or contract shall be considered binding upon the State until the contract has been fully and properly executed by all parties thereto and the Comptroller has endorsed thereon its certificate, as required by Section 103D-309, HRS, that there is an available unexpended appropriation or balance of an appropriation over and above all outstanding contracts sufficient to cover the State's amount required by such contract.

3.8.2 On any individual award totaling less than $25,000, the State reserves the right to execute the contract by the issuance of a State Purchase Order. Issuance of a State Purchase Order shall result in a binding contract between the parties without further action by the State. The issuance of a State Purchase Order shall not be deemed a waiver of these General Conditions and Contract Document requirements.

3.9 FAILURE TO EXECUTE THE CONTRACT

3.9.1 Before the Award - If a low Bidder without legal justification withdraws its bid after the opening of bids but before the award of the contract, the State shall be entitled to retain as liquidated damages the amount established as bid security, and may take all appropriate actions to recover the liquidated damages sum from the property or third-party obligations deposited as bid security.

3.9.2 After the Award - If the Bidder to whom a contract is awarded shall fail or neglect to enter into the contract and to furnish satisfactory security within ten (10) calendar days after such award or within such further time as the Comptroller may allow, the State shall be entitled to recover from such Bidder its actual damages, including but not limited to the difference between the bid and the next lowest responsive bid, as well as personnel and administrative costs, consulting and legal fees and other expenses incurred in arranging a contract with the next low responsive bidder or calling for new bids. The State may apply all or part of the amount of the bid security to reduce its damages. If upon determination by the State of the amount of its damages the bid security exceeds that amount, it shall release or return the excess to the person who provided same.

3.9.3 Comptroller's Options - Upon a withdrawal of the lowest responsive bid, or upon a refusal or failure of the lowest Bidder to execute the contract, the Comptroller may thereupon award the contract to the next lowest responsible and responsive Bidder or may call for new bids, whichever method the Comptroller may deem to be in the best interests of the State.

3.10 NOTICE TO PROCEED

3.10.1 After the contract is fully executed and signed by the Comptroller, the Contractor will be sent a formal Notice to Proceed letter advising the Contractor of the date on which it may proceed with the work. The Contractor shall be allowed ten (10) consecutive working days from said date to begin its work. In the event that the Contractor refuses or neglects to start the work, the Comptroller may terminate the contract in accordance with Section 7.27 TERMINATION OF CONTRACT FOR CAUSE.

3.10.2 The Contractor may commence its operations strictly at its own risk prior to receipt of the formal notice to proceed, provided it makes a written request and has received approval from the Engineer in writing. All work performed shall be conducted in accordance with Section 7.1 PROSECUTION OF THE WORK.

3.10.3 In certain cases, the State, with agreement of the Contractor, may issue a Notice to Proceed before full execution of the contract by the Comptroller and it may further issue a Notice to Proceed concurrently with the Notice of Award.

3.10.4 In the event the Notice to Proceed is not issued within one hundred and eighty (180) days after the date of the award of contract the Contractor may submit a claim for increased labor and material costs (but not overhead costs) which are directly attributable to the delay beyond the first 180 days. Such claims shall be accompanied with the necessary documentation to justify the claim. No payment will be made for escalation costs that are not fully justified.

GENERAL CONDITIONS

ARTICLE 4 - Scope of Work

4.1 INTENT OF CONTRACT, DUTY OF CONTRACTOR - The intent of the Contract is to provide for the construction, complete in every detail, of the Work described at the accepted bid price and within the time established by the contract. The Contractor has the duty to furnish all labor, materials, equipment, tools, transportation, incidentals and supplies and to determine the means, methods and schedules required to complete the work in accordance with the drawings, specifications and terms of the contract.

4.2 CHANGES - The Engineer may at any time, during the progress of the work, by written order, and without notice to the sureties, make changes in the work as may be found to be necessary or desirable. Such changes shall not invalidate the Contract nor release the Surety, and the Contractor will perform the work as changed, as though it had been a part of the original Contract.

4.2.1 Minor Changes - Minor changes in the work may be directed by the Engineer with no change in contract price or time of performance. Minor changes are consistent with the intent of the Contract Documents and do not substantially alter the type of work to be performed or involve any adjustment to the contract sum or extension of the contract time.

4.2.2 Oral Orders

4.2.2.1 Any oral order, direction, instruction, interpretation or determination from the Engineer or any other person which in the opinion of the Contractor causes any change, shall be considered as a change only if the Contractor gives the Engineer written notice of its intent to treat such oral order, direction, instruction, interpretation or determination as a change directive. Such written notice must be delivered to the Engineer before the Contractor acts in conformity with the oral order, direction, instruction, interpretation or determination, but not more than five (5) days after delivery of the oral order to the Contractor. The written notice shall state the date, circumstances, whether a time extension will be requested, and source of the order that the Contractor regards as a change. Such written notice may not be waived and shall be a condition precedent to the filing of any claim by the Contractor. Unless the Contractor acts in accordance with this procedure, any such oral order shall not be treated as a change for which the Contractor may make a claim for an increase in the contract time or contract price related to such work.

4.2.2.2 No more than five (5) days after receipt of the written notice from the Contractor, a Field Order shall be issued for the subject work if the State agrees that it constitutes a change. If no Field Order is issued in the time established, it shall be deemed a rejection of Contractor's claim for a change. If the Contractor objects to the failure to issue a Field Order, it shall file a written protest with the Engineer within thirty (30) days after delivery to the Engineer of the Contractor's written notice of its intention to treat the oral order as a change. In all cases, the Contractor shall proceed with the work. The protest shall be determined as provided in Section 7.25 DISPUTES AND CLAIMS.

4.2.3 Field Orders – Upon receipt of a Field Order, the Contractor shall proceed with the changes as ordered. If the Contractor does not agree with any of the terms or conditions or in the adjustment or non-adjustment to the contract time and / or contract price, Contractor shall file a notice of intent to claim within thirty (30) calendar days after receipt of the written Field Order that was not agreed upon by both parties. Failure to file such protest within the time specified shall constitute agreement on the part of the Contractor with the terms, conditions, amounts and adjustment or non-adjustment to contract price and / or contract time set forth in the Field Order. The requirement for timely written notice shall be a condition precedent to the assertion of a claim.

4.2.4 Change Orders

4.2.4.1 The Department will issue sequentially numbered Change Orders at times it deems appropriate during the contract period. A Change Order may contain the adjustment in contract price and / or time for a number of Field Orders. The Change Order will be issued in the format attached (refer to the Appendix). No payment for any change will be made until the change order is issued.

4.2.4.2 The penal sum of the Surety Performance and Payment Bonds will be adjusted by the amount of each and every Change Order.

4.2.4.3 Upon receipt of a Change Order, if the Contractor does not agree with any of the terms or conditions or in the adjustment or non-adjustment to the contract time and / or contract price, Contractor shall file a notice of intent to claim within thirty (30) calendar days after receipt of the written Change Order that was not agreed upon by both parties. Failure to file such protest within the time specified shall constitute agreement on the part of the Contractor with the terms, conditions, amounts and adjustment or non-adjustment to contract price and / or contract time set forth in the Change Order. The requirement for timely written notice shall be a condition precedent to the assertion of a claim.

4.3 DUTY OF CONTRACTOR TO PROVIDE PROPOSAL FOR CHANGES

4.3.1 A Field Order may request the Contractor to supply the Department with a proposal for an adjustment to the contract time or contract price for the work described therein. Any such request for a proposal shall not affect the duty of the Contractor to proceed as ordered with the work described in the Field Order.

4.3.2 The Engineer from time to time may issue a Bulletin to the Contractor requesting price and / or time adjustment proposals for contemplated changes in the work. A Bulletin is not a directive for the Contractor to perform the work described therein.

4.3.3 Within fifteen (15) days after receipt of a Bulletin or Field Order containing a request for proposal, the Contractor shall submit to the Engineer a detailed written statement in a format similar to the one shown in the Appendix to these General Conditions setting forth all charges the Contractor proposes for the change and the proposed adjustment of the contract time, all properly itemized and supported by sufficient substantiating data to permit evaluation. No time extension will be granted for delays caused by late Contractor pricing of changes or proposed changes. If the project is delayed because Contractor failed to submit the cost proposal within the fifteen (15) days, or as allowed by the Engineer, liquidated damages will be assessed in accordance with Section 7.26 FAILURE TO COMPLETE THE WORK ON TIME.

4.3.4 No payment shall be allowed to the Contractor for pricing or negotiating proposed or actual changes.

4.4 PRICE ADJUSTMENT §3-125-13 HAR

4.4.1 Any adjustment in the contract price pursuant to a change or claim in this contract shall be made in one or more of the following ways:

4.4.1.1 By agreement to a fixed price adjustment before commencement of the pertinent performance or as soon thereafter as practicable;

4.4.1.2 By unit prices specified in the contract or subsequently agreed upon;

4.4.1.3 Whenever there is a variation in quantity for any work covered by any line item in the schedule of costs submitted as required by Section 7.2 COMMENCEMENT REQUIREMENTS, by the Department at its discretion, adjusting the lump sum price proportionately;

4.4.1.4 In such other manner as the parties may mutually agree;

4.4.1.5 At the sole option of the Engineer, by the costs attributable to the event or situation covered by the change, plus appropriate profit or fee, all as specified in Section 4.5 ALLOWANCES FOR OVERHEAD AND PROFIT and the force account provision of Section 8.3 PAYMENT FOR ADDITIONAL WORK; or

4.4.1.6 In the absence of an agreement between the two parties, by a unilateral determination by the Engineer of the reasonable and necessary costs attributable to the event or situation covered by the change, plus appropriate profit or fee, all as computed by the Engineer in accordance with applicable sections of Chapters 3-123 and 3-126 of the Hawaii Administrative Rules and Regulations, and Section 4.5 ALLOWANCES FOR OVERHEAD AND PROFIT.

4.5 ALLOWANCES FOR OVERHEAD AND PROFIT §3-125-13 HAR

4.5.1 In determining the cost or credit to the Department resulting from a change, the allowances for all overhead, including, extended overhead resulting from adjustments to contract time (including home office, branch office and field overhead, and related delay impact costs) and profit combined, shall not exceed the percentages set forth below:

4.5.1.1 For the Contractor, for any work performed by its own labor forces, fifteen percent (15%) of the direct cost;

4.5.1.2 For each subcontractor involved, for any work performed by its own forces, fifteen percent (15%) of the direct cost;

4.5.1.3 For the Contractor or any subcontractor, for work performed by their subcontractors, seven percent (7%) of the amount due the performing subcontractor.

4.5.2 Not more than three markup allowance line item additions not exceeding the maximum percentage shown above will be allowed for profit and overhead, regardless of the number of tier subcontractors.

4.5.3 The allowance percentages will be applied to all credits and to the net increase of direct costs where work is added and deleted by the changes.

4.6 PAYMENT FOR DELETED MATERIAL

4.6.1 Canceled Orders - If acceptable material was ordered by the Contractor for any item deleted by an ordered change in the work prior to the date of notification of such deletion by the Engineer, the Contractor shall use its best efforts to cancel the order. The Department shall pay reasonable cancellation charges required by the supplier excluding any markup for overhead and profit to the Contractor.

4.6.2 Returned Materials - If acceptable deleted material is in the possession of the Contractor or is ultimately received by the Contractor, if such material is returnable to the supplier and the Engineer so directs, the material shall be returned and the Contractor will be paid for the reasonable charges made by the supplier for the return of the material, excluding any markup for overhead and profit to the Contractor. The cost to the Contractor for handling the returned material will be paid for as provided in Section 4.4 PRICE ADJUSTMENT.

4.6.3 Uncancelled Materials - If orders for acceptable deleted material cannot be canceled at a reasonable cost, it will be paid for at the actual cost to the Contractor including an appropriate markup for overhead and profit as set forth in Section 4.5 ALLOWANCES FOR OVERHEAD AND PROFIT. In such case, the material paid for shall become the property of the State and the cost of further storage and handling shall be paid for as provided in Section 4.4 PRICE ADJUSTMENT.

4.7 VARIATIONS IN ESTIMATED QUANTITIES §3-125-10 HAR

4.7.1 Where the quantity of a major unit price item in this contract is estimated on the proposal form and where the actual quantity of such pay item varies more than fifteen percent (15%) above or below the estimated quantity stated in this contract, an adjustment in the contract price shall be made upon demand of either party. The adjustment shall be based upon any increase or decrease in costs due solely to the variation above one hundred fifteen percent (115%) or below eighty-five percent (85%) of the estimated quantity. The adjustment shall be subject to Section 4.4 PRICE ADJUSTMENT and Section 4.5 ALLOWANCES FOR OVERHEAD AND PROFIT. If the quantity variation is such as to cause an increase in the time necessary for completion, the Engineer shall, upon receipt of a written request for an extension of time within thirty (30) days of the item's completion, ascertain the facts and make such adjustment to the completion date as the Engineer finds justified.

4.8 VARIATIONS IN BOTTOM ELEVATIONS The Contractor shall plan and construct to the bottom elevations of footings, piles, drilled shafts, or cofferdams as shown on the drawings. When the bottom of a pile, drilled shaft, or cofferdam is shown as an estimated or approximate elevation, the Contractor shall plan and construct to that elevation or to any deeper elevation required by the drawings or direction of the Engineer. In the event the bottom elevation is lowered, the Contractor shall be entitled to additional payment in accordance with Sections 4.4 PRICE ADJUSTMENT and 4.5 ALLOWANCES FOR OVERHEAD AND PROFIT. In the event the bottom elevation is raised, the State shall be entitled to a credit in accordance with Sections 4.2 CHANGES, 4.4 PRICE ADJUSTMENT and 4.5 ALLOWANCES FOR OVERHEAD AND PROFIT.

4.9 DIFFERING SITE CONDITIONS §3-125-11 HAR

4.9.1 During the progress of the work, if the Contractor encounters conditions at the site differing materially from those

shown in the drawings and specifications, Contractor shall promptly, and before any such conditions are disturbed or damaged (except in an emergency as required by subsection 7.17.8), notify the Engineer in writing of:

4.9.1.1 Subsurface or latent physical conditions at the site differing materially from those indicated in the contract; or

4.9.1.2 Unknown physical conditions at the site, of an unusual nature differing materially from those ordinarily encountered and generally recognized as inherent in work of the character provided for in this contract.

4.9.2 After receipt of written notice, the Engineer shall promptly investigate the site, and if it is found that such conditions do materially differ and cause an increase in the Contractor's cost of, or the time required to, perform any part of the Work, whether or not changed as a result of such conditions, an adjustment shall be made and the contract modified accordingly. Any adjustment in contract price made pursuant to this Section 4.9 shall be determined in accordance with Sections 4.4 PRICE ADJUSTMENT and 7.25 DISPUTES AND CLAIMS.

4.9.3 Nothing contained in this Section 4.9 shall be grounds for an adjustment in compensation if the Contractor had actual knowledge or should have known of the existence of such conditions prior to the submission of bids.

4.10 UTILITIES AND SERVICES

4.10.1 The cost of all the following will be included in the contract price and the Contractor shall be fully responsible for:

4.10.1.1 Reviewing and checking all such information and data,

4.10.1.2 Locating all underground and overhead utilities shown or indicated in the contract documents,

4.10.1.3 Coordination of the Work with the Owners of such underground and overhead utilities during construction, and

4.10.1.4 The safety and protection of all such underground and overhead utilities as provided in Section7.17 PROTECTION OF PERSONS AND PROPERTY and repairing any damage thereto resulting from the work.

4.10.2 Unknown Utilities - During the progress of the work, if an underground utility is uncovered or revealed at or contiguous to the site which was not shown or indicated in the Contract Documents, or found at a location that is substantially different than shown or indicated in the Contract Documents, Contractor shall promptly, and before any such conditions are disturbed or damaged (except in an emergency as required by subsection 7.17.8), notify the Engineer. Contractor shall be responsible for the safety and protection of the underground utility as provided in Section7.17 PROTECTION OF PERSONS AND PROPERTY. Refer to subsections 4.9.2 and 4.9.3.

4.10.3 If the Engineer determines a change in the Contract Documents is required, a Field Order or Change Order will be issued. Upon issuance of a duly authorized Field Order or Change Order regarding the disposition of a newly discovered utility, Contractor shall be responsible for damages to the utility, including any damage claims due to the disruption of service caused by the utility being damaged.

4.10.4 Restoration of Damaged Utilities - The Contractor shall repair and restore to pre-damaged condition any utilities or any other property it damaged. The Contractor shall be liable for any resulting damages, to the Work or to the utility owner or property owner and shall pay any claim due to the disruption of service caused by the utilities being damaged. Contractor shall defend and save harmless the State from all suits, actions or claims of any character brought on account of such damages, whether or not the State may have been partially at fault. Contractor shall obtain public liability and property damage insurance pursuant to Article 7 PROSECUTION AND PROGRESS to cover such risk of damage.

4.10.5 In the event the Contractor, simultaneously with the discovery of an unknown utility or other property, damages that utility or other property, the Contractor shall immediately notify the Engineer. If the Contractor is without fault in such a situation, notwithstanding subsection 4.10.4, the Contractor shall not be liable for resulting damages or the defense of the State from claims brought on account of said damages to unknown utilities or other property. Upon instruction from the Engineer, the Contractor shall repair all damages and execute a plan for dealing with the damaged utility or other property. This repair work shall be considered additional work as covered in Section 4.2 CHANGES.

ARTICLE 5 - Control of Work

5.1 AUTHORITY OF THE ENGINEER

5.1.1 The Engineer shall make final and conclusive decisions on all questions which may arise relating to the quality and acceptability of the materials furnished and work performed, the manner of performance and rate of progress of the work, the interpretation of the Contract Documents, the acceptable fulfillment of the contract on the part of the Contractor, the compensation under the Contract and the mutual rights of the parties to the Contract.

5.1.2 The Engineer shall have the authority to enforce and make effective such decisions and orders at the Contractor's expense when the Contractor fails to carry such decisions and orders out promptly and diligently.

5.1.3 The Engineer shall have the authority to suspend the work wholly or in part as provided in Section 7.24 SUSPENSION OF WORK.

5.1.4 The Engineer may delegate specific authority to act for the Engineer to a specific person or persons. Such delegation of authority shall be established in writing to the Contractor.

5.2 AUTHORITY OF THE INSPECTOR

5.2.1 The Inspector shall observe and inspect the contract performance and materials. The Inspector does not have any authority vested in the Engineer unless specifically delegated in writing.

5.2.2 The Inspector may offer advice and recommendations to the Contractor, but any such advice or recommendations are not directives from the Engineer.

5.2.3 The Inspector has no authority to allow deviations from the Contract Documents and may reject any and all work that the Inspector deems is not in conformity with the contract requirements. Failure of an Inspector at any time to reject non-conforming work shall not be considered a waiver of the Department's right to require work in strict conformity with the Contract Documents as a condition of final acceptance.

5.3 AUTHORITY OF CONSULTANT(S) - The Department may engage Consultant(s) for limited or full observation to supplement the inspections performed by the State and respective Counties. Unless otherwise specified in writing to the Contractor, such retained Consultant(s) will have the authority of a Project Inspector.

5.4 SHOP DRAWINGS AND OTHER SUBMITTALS

5.4.1 The following documents shall be submitted where required by the contract documents:

5.4.1.1 **Shop Drawings**

(a) The Contractor shall prepare, and thoroughly check, approve, all shop drawings, including those prepared by subcontractors or any other persons. The Contractor shall indicate its approval by stamping and signing each drawing. Any shop drawing submitted without being reviewed, stamped and signed will be considered as not having been submitted, and any delay caused thereby shall be the Contractor's responsibility.

(b) Shop drawings shall indicate in detail all parts of an item of work, including erection and setting instructions and engagements with work of other trades or other separate contractors. Shop drawings for structural steel, millwork and pre-cast concrete shall consist of calculations, fabrication details, erection drawings and other working drawings, as necessary, to show the details, dimensions, sizes of members, anchor bolt plans, insert locations and other information necessary for the complete fabrication and erection of the structure to be constructed.

(c) All shop drawings as required by the contract, or as determined by the Engineer to be necessary to illustrate details of the Work shall be submitted to the Engineer with such promptness as to cause no delay in the work or in that of any other Contractor. Delay caused by the failure of the Contractor to submit shop drawings on a timely basis to allow for review, possible resubmittal and acceptance will not be considered as a justifiable reason for a contract time extension. Contractor, at its own risk, may proceed with the work affected by the shop drawings before receiving acceptance, however the Department shall not be liable for any costs or time required for the correction of work done without the benefit of accepted shop drawings.

(d) It is the Contractor's obligation and responsibility to check all of its and its subcontractor's shop drawings and be fully responsible for them and for coordination with connecting and other related work. The Contractor shall prepare, and submit to the Engineer coordination drawings showing the installation locations of all plumbing, piping, duct and electrical work including equipment throughout the project. By approving and submitting shop drawings, the Contractor thereby represents that it has determined and verified all field measurements and field construction criteria, or will do so, and that it has checked and coordinated each shop drawing with the requirements of the work and the contract documents. When shop drawings are prepared and processed before field measurements and field construction criteria can be or have been determined or verified, the Contractor shall make all necessary adjustments in the work or resubmit further shop drawings, all at no change in contract price or time.

5.4.1.2 Shop Drawing Form - Each drawing and/or series of drawings submitted must be accompanied by a letter of transmittal giving a list of the titles and number of the drawings. Each series shall be numbered consecutively for ready reference and each drawing shall be marked with the following information:

(a) Date of Submission

(b) Name of Project

(c) Project Number

(d) Location of Project

(e) Name of submitting Contractor and Subcontractor

(f) Revision Number

5.4.1.3 The size of the sheets that shop drawings are prepared on shall be as appropriate to suit the drawing being presented so that the information is clearly and legibly depicted. At the determination of the Engineer, for each sheet of drawings, the submittal shall consist of either; one reproducible transparency and five prints, or eight prints.

5.4.14 Descriptive Sheets and Other Submittals When a submittal is required by the contract, the Contractor shall submit to the Engineer eight (8) complete sets of descriptive sheets such as brochures, catalogs, illustrations, etc., which will completely describe the material, product, equipment, furniture or appliances to be used in the project as shown in the drawings and specifications. Prior to the submittal, the Contractor will review and check all descriptive sheets for conformity to the contract requirements and indicate such conformity by marking or stamping and signing each sheet. It is the responsibility of the Contractor to submit descriptive sheets for review and acceptance by the Engineer as required at the earliest possible date after the date of award in order to meet the construction schedule. Delays caused by the failure of the Contractor to submit descriptive sheets as required will not be considered as justifiable reasons for contract time extension.

5.4.15 Material Samples and Color Samples - When sample submittals are required by the contract, the Contractor shall review, approve, indicate its approval and submit to the Engineer samples of the materials to be used in the project and color selection samples. It is the responsibility of the Contractor to submit material and color samples for review as required at the earliest possible date after the date of award in order to meet the construction schedule. Delays caused by the failure of the Contractor to submit material and color samples will not be considered as justifiable reasons for contract time extension.

5.4.2 Submittal Variances - The Contractor shall include with the submittal, written notification clearly identifying all deviations or variances from the contract drawings, specifications and other Contract Documents. The notice shall be in a written form separate from the submittal. The variances shall also be clearly indicated on the shop drawing, descriptive sheet, material sample or color sample. Failure to so notify of and identify such variances shall be grounds for the subsequent rejection of the related work or materials, notwithstanding that the submittal was accepted by the Engineer. If the variances are not acceptable to the Engineer, the Contractor will be required to furnish the item as specified or indicated on the contract documents at no additional cost or time.

5.4.3 Review and Acceptance Process - Submittals will be returned to the Contractor within twenty one (21) days (for projects on Oahu) and twenty five (25) days (for projects on the islands of Hawaii, Maui, Kauai, Molokai and Lanai) after receipt by the Engineer unless otherwise agreed between the Contractor and the Engineer or as stated elsewhere in the contract documents.

5.4.3.1 The acceptance by the Engineer of the Contractor's submittal relates only to their sufficiency and compliance with the intention of the contract. Acceptance by the Engineer of the Contractor's submittal does not relieve the Contractor of any responsibility for accuracy of dimensions, details, and proper fit, and for agreement and conformity of submittal with the contract drawings and specifications. Nor will the Engineer's acceptance relieve the Contractor of responsibility for variance from the contract documents unless the Contractor, at the time of submittal, has provided notice and identification of such variances required by this section. Acceptance of a variance shall not justify a contract price or time adjustment unless the Contractor requests such an adjustment at the time of submittal and the adjustment is explicitly agreed to in writing by the Engineer. Any such request shall include price details and proposed scheduling modifications. Acceptance of a variance is subject to all contract terms, stipulations and covenants, and is without prejudice to any and all rights under the surety bond.

5.4.3.2 If the Engineer returns a submittal to the Contractor that has been rejected, the Contractor, so as not to delay the work, shall promptly make a resubmittal conforming to the requirements of the contract documents and indicating in writing on the transmittal and the subject submittal what portions of the resubmittal has been altered in order to meet the acceptance of the Engineer. Any other differences between the resubmittal and the prior submittal shall also be specifically described in the transmittal.

5.4.3.3 No mark or notation made by the Engineer on or accompanying the return of any submittal to the Contractor shall be considered a request or order for a change in work. If the Contractor believes any such mark or notation constitutes a request for a change in the work for which it is entitled to an adjustment in contract price and/or time, the Contractor must follow the same procedures established in Section 4.2 CHANGES for oral orders, directions, instructions, interpretations or determinations from the Engineer or else lose its right to claim for an adjustment.

5.5 COORDINATION OF CONTRACT DOCUMENTS - It is the intent of the Contract Documents to describe a functionally complete Project (or part thereof) to be constructed in accordance with the Contract Documents. The Contract Documents are complementary: any requirement occurring in one document is as binding as though occurring in all. In the event of conflict or discrepancy the priorities stated in the following subparagraphs shall govern:

5.5.1 Addenda shall govern over all other Contract Documents. Subsequent addenda issued shall govern over prior addenda only to the extent specified.

5.5.2 SPECIAL CONDITIONS and Proposal shall govern over the GENERAL CONDITIONS and Specifications.

5.5.3 Specifications shall govern over drawings.

5.5.4 Specification Error - Should an error or conflict appear within the specification, the Contractor shall immediately notify the Engineer. The Engineer shall promptly issue instructions as to procedure. Any requirement occurring in one or more parts of the specification is as binding as though occurring in all applicable parts.

5.5.4.1 Should an error or conflict appear within a specification section, between a listed manufacturer / product and the performance requirements of the specification section, the performance requirements shall govern.

5.5.5 Drawings:

5.5.5.1 Schedules shall govern over all other notes and drawings.

5.5.5.2 Bottom elevations of footings shown on drawings shall govern over a general note such as: "All footings shall rest on firm, undisturbed soil and extend a minimum of a certain number of feet into natural or finish grade, whichever is lower."

5.5.5.3 Except for drawing schedules and bottom elevations as noted above, general notes shall govern over all other portions of the drawings:

5.5.5.4 Larger scale drawings shall govern over smaller scale drawings.

5.5.5.5 Figured or numerical dimensions shall govern over dimensions obtained by scaling. Measurements from the drawings when scaled shall be subject to the approval of the Engineer.

5.5.5.6 In cases of discrepancies in the figures or drawings, the discrepancies shall be immediately referred to the Engineer without whose decision said discrepancy shall not be corrected by the Contractor save at its own risk and in the settlement of any complications arising from such adjustment without the knowledge and consent of the Engineer, the Contractor shall bear all extra expense involved.

5.5.5.7 Items shown on the drawings that are completely void in terms of description, details, quality and / or performance standards in both the drawings and specifications to make a price determination shall be considered an omission and the Contractor shall immediately refer same to the Engineer for a decision.

5.5.5.8 Where there is a conflict between the architectural sheets and the civil or landscaping or electrical sheets, etc., the conflict shall be considered a discrepancy and the Contractor shall immediately refer same to the Engineer for a decision.

5.5.5.9 Any requirement occurring in one or more of the sheets is as binding as though occurring in all applicable sheets.

5.6 INTERPRETATION OF DRAWINGS AND SPECIFICATIONS - The Contractor shall carefully study and compare the Contract Documents with each other, with field conditions and with the information furnished by the State and shall at once report to the Engineer errors, conflicts, ambiguities, inconsistencies or omissions discovered. Should an item not be sufficiently detailed or explained in the Contract Documents, Contractor shall report and request the Engineer' clarification and interpretation. The Engineer will issue a clarification or interpretation that is consistent with the intent of and reasonably inferred from Contract Documents.

5.7 EXAMINATION OF DRAWINGS, SPECIFICATIONS, PROJECT SITE

5.7.1 The Contractor shall examine carefully the Project Site to become familiar with the conditions to be encountered in performing the Work and the requirements of the Contact Documents.

5.7.1.1 No extra compensation will be given by reason of the Contractor's misunderstanding or lack of knowledge of the requirements of the Work to be accomplished or the conditions to be encountered in performing the project.

5.7.1.2 No extra compensation will be given by reason of the Contractor's misunderstanding or lack of knowledge when the existence of differing site, subsurface or physical conditions could have been reasonably discovered or revealed as a result of any examination, investigation, exploration, test or study of the site and contiguous areas required by the Bidding requirements or Contract Documents to be conducted by or for the Contractor.

5.7.2 When the Contract Drawings include a log of test borings showing a record of the data obtained by the Department's investigation of subsurface conditions, said log represents only the opinion of the Department as to the character of material encountered in its test borings and at only the location of each boring. The Contractor acknowledges that underground site conditions in Hawaii vary widely. There is no warranty, either expressed or implied, that the conditions indicated are representative of those existing throughout the work or any part of it, or that other conditions may not occur.

5.7.3 Reference is made to the SPECIAL CONDITIONS for identification of subsurface investigations, reports, explorations and tests utilized by the State in preparation the Contract Documents. Such reports, drawings, boring logs etc. are not part of the Contract Documents.

5.8 COOPERATION BETWEEN THE CONTRACTOR AND THE DEPARTMENT

5.8.1 Furnishing Drawings and Specifications - Contractor will be supplied up to twenty-four (24) copies of the Contract Drawings and Specifications. Contractor shall have and maintain at least one copy of the Contract Drawings and Specifications on the work site, at all times. Contractor shall cooperate with the Engineer, the Inspector(s), and other contractors in every possible way.

5.8.2 Superintendent - The Contractor shall have a competent superintendent or agent on the work site while work is being performed under the contract. The superintendent or agent shall be experienced in the type of project being undertaken and the work being performed. The superintendent or agent shall represent the Contractor and shall have the authority to act on behalf of the Contractor. Communications given to the superintendent or agent shall be as binding as if given to the Contractor.

5.8.2.1 If the superintendent or agent is not present at the work site, the Engineer shall have the right to suspend the work as described under Section 7.24 SUSPENSION OF WORK.

5.8.2.2 The Contractor shall file with the Engineer a written statement giving the name of the superintendent or agent assigned to the project. The Contractor shall be responsible for notifying the Engineer in writing of any change in the superintendent or agent.

5.8.2.3 The requirements of this subsection 5.8.2 may be waived by the Engineer.

5.8.3 Engineering Work - The Contractor shall properly and accurately lay out the work, perform all engineering work, and furnish all engineering materials and equipment required to establish and maintain all lines, grades, dimensions and elevations called for in the drawings or required in the progress of construction, unless otherwise noted in the contract documents. The Contractor will be held definitely and absolutely responsible for any errors in lines, grades, dimensions and elevations and shall at once, on instruction from the Engineer, correct and make good such errors or any errors, or faults in the work resulting from errors in engineering performed under the requirements of its contract to the entire satisfaction of the Engineer. Full compensation for the work shall be included in the prices paid for contract items of work. No additional allowance will be made for the correction of incorrect engineering work.

5.8.3.1 The Engineer shall furnish the requisite bench elevations.

5.8.3.2 The Contractor shall locate and verify all lines, grades, dimensions and elevations indicated on the drawings before any excavation, or construction begins. Any discrepancy shall be immediately brought to the attention of the Engineer, any change shall be made in accordance with the Engineer's instruction.

5.8.3.3 The Contractor shall verify all street survey monuments (horizontal and vertical alignment) prior to final acceptance by the Engineer in accordance with any governmental requirements.

5.8.3.4 The Contractor shall provide a surveyor or Civil Engineer licensed in the State of Hawaii to verify and establish all lines, grades, dimensions and elevations.

5.8.4 Use of Structure or Improvement - The Department shall have the right, at any time during construction of the structure or improvements, to enter same for the purpose of installing by government labor or by any other Contractor or utility any necessary work in connection with the installation of facilities, it being mutually understood and agreed, however, that the Contractors, utilities and the Department will, so far as possible work to the mutual advantage of all, where their several works in the above mentioned or in unforeseen instances touch upon or interfere with each other. As a convenience to those involved, the Engineer shall allocate the work and designate the sequence of construction in case of controversy between Contractors on separate projects under State jurisdiction.

5.8.4.1 The Department shall also have the right to use the structure, equipment, improvement or any part thereof, at any time after it is considered by the Engineer as available. In the event that the structure, equipment or any part thereof is so used, the Department shall be responsible for all expenses incidental to such use and any damages resulting from the Department's use.

5.8.4.2 Equipment warranty will commence to run before the work is complete when and if the Department begins actual use of the equipment for the purpose for which the equipment was designed and installed.

5.8.4.3 If the Department enters the structure for construction and / or occupancy and the Contractor is delayed because of interference by the Department or by extra work resulting from damage which the Contractor is not responsible for, or by extraordinary measures the Contractor must take to accommodate the Department, the Contractor shall be granted an extension of time in accordance with Section 7.21 CONTRACT TIME. However, if such use increases the cost or delays the completion of the remaining portions of work, the Contractor shall be entitled to such extra compensation or extension of time or both, as the State may determine to be proper. Any additional work necessary will be paid in accordance with Section 8.3 PAYMENT FOR ADDITIONAL WORK.

5.9 INSPECTION - The Engineer, the Department's consultants, Inspectors employed by the Department and other representatives duly authorized by the Department shall at all times have access to the work during its construction and shall be furnished with every reasonable facility for ascertaining at any time that the materials and the workmanship are in accordance with the requirements and intentions of the contract. All work done and all materials furnished shall be subject to inspection and acceptance.

5.9.1 Such inspection and approval may extend to all or part of the work, and to the preparation, fabrication or manufacture of the materials to be used. By entering into a contract for the supply of materials, equipment or performance of labor in connection with the Work, such Material and Equipment Supplier or Labor Contractor consents to and is subject to the terms of this Section 5.9 to the same extent as the Contractor.

5.9.2 Authority to Suspend Operations - The Inspector shall have the authority to suspend operations of any work being improperly performed by issuing a written order giving the reason for shutting down the work. Should the Contractor disregard such written order, the work done thereafter will not be accepted nor paid for.

5.9.3 The inspection of the work shall not relieve the Contractor of any of its obligations to fulfill the contract as prescribed. Notwithstanding prior payment and acceptance by the Engineer, defective and nonconforming work shall be corrected to comply with the contract requirements. Unsuitable, unspecified or unapproved materials may be rejected.

5.9.4 Federal Agency Inspection - Projects financed in whole or in part with Federal funds shall be subject to inspection and corrective requirements at all times by the Federal Agency involved at no cost to the State.

5.10 REMOVAL OF DEFECTIVE, NON-CONFORMING AND UNAUTHORIZED WORK

5.10.1 All work which has been rejected as not conforming to the requirements of the Contract shall be remedied or removed and replaced by the Contractor in an acceptable manner and no compensation will be allowed for such removal or replacement. Any work done beyond the work limits shown on the drawings and specifications or established by the Engineer or any additional work done without written authority will be considered as unauthorized and will not be paid for. Work so done may be ordered removed at the Contractor expense.

5.10.2 Scheduling Corrective Work - The Contractor shall perform its corrective or remedial work at the convenience of the State and shall obtain the Engineer's approval of its schedule.

5.10.3 Failure to Correct Work -Upon failure on the part of the Contractor to comply promptly with any order of the Engineer made under the provisions of this Section 5.10, the Engineer shall have authority to cause defective work to be remedied or removed and replaced, and unauthorized work to be removed, at the Contractor's expense, and to deduct the costs from any monies due or to become due the Contractor.

5.11 VALUE ENGINEERING INCENTIVE

§3-132 HAR amended by Act 149 SLH 1999 **-** On projects with contract amounts in excess of $250,000, the following Value Engineering Incentive Clause shall apply to allow the

Contractor to share in cost savings that ensue from cost reduction proposals it submits.

5.11.1 The Value Engineering Incentive Clause applies to all Value Engineering Change Proposals (cost reduction proposals, hereinafter referred to as (VECP) initiated and developed by the Contractor for changing the drawings, designs, specifications or other requirements of this contract. This clause does not, however apply to any VECP unless it is identified as such by the Contractor at the time of its submission to the Engineer.

5.11.2 Value Engineering Change Proposal - All VECP must:

5.11.2.1 Result in a savings to the State of at least four thousand dollars ($4,000) by providing less costly items than without impairing any essential functions and characteristics such as service life, reliability, economy of operation, ease of maintenance and all necessary features of the completed work.

5.11.2.2 Require, in order to be applied to this contract, a change order to this contract.

5.11.2.3 Not adversely impact on the schedule of performance or the contract completion date.

5.11.3 VECP Required Information - The VECP will be processed expeditiously and in the same manner as prescribed for any other change order proposal. As a minimum, the following information will be submitted by the Contractor with each proposal:

5.11.3.1 A description of the difference between the existing contract requirements and the VECP, and the comparative advantages and disadvantages of each including durability, service life, reliability, economy of operation, ease of maintenance, design safety standards, desired appearance, impacts due to construction and other essential or desirable functions and characteristics as appropriate;

5.11.3.2 An itemization of the requirements of the contract which must be changed if the VECP is adopted and a recommendation as to how to make each such change;

5.11.3.3 An estimate of the reduction in performance costs that will result from adoption of the VECP taking into account the costs of implementation by the Contractor, including any amounts attributable to subcontracts, and the basis for the estimate;

5.11.3.4 A prediction of any effects the VECP would have on other costs to the State, such as State furnished property costs, costs of related items, and costs of maintenance and operation over the anticipated life of the material, equipment, or facilities as appropriate; the construction schedule, sequence and time; and bid item totals used for evaluation and payment purposes;

5.11.3.5 A statement of the time by which a change order adopting the VECP must be issued so as to obtain the maximum cost reduction during the remainder of this contract noting any effect on the contract time; and

5.11.3.6 The dates of any previous submissions of the VECP, the numbers of any Government contracts under which submitted and the previous actions by the Government, if known.

5.11.4 Required Use of Licensed Architect or Engineer - When, in the judgment of the Engineer, a VECP alters the design prepared by a registered professional architect or engineer, the Contractor shall ensure the changes to be prepared are by or under the supervision of a licensed professional architect or engineer, and stamped and so certified.

5.11.5 Unless and until a change order applies a VECP to a contract, the Contractor shall remain obligated to perform in accordance with the terms of the contract and the Department shall not be liable for delays incurred by the Contractor resulting from the time required for the Department's determination of the acceptability of the VECP.

5.11.5.1 The determination of the Engineer as to the acceptance of any VECP under a contract shall be final.

5.11.6 Acceptance of VECP - The Engineer may accept in whole or in part any VECP submitted pursuant to this section by issuing a change order to the contract. Prior to issuance of the change order, the Contractor shall submit complete final contract documents similar to those of the original contract showing the accepted changes and the new design and features as well as the following:

5.11.6.1 Design calculations;

5.11.6.2 The design criteria used; and

5.11.6.3 A detailed breakdown of costs and expenses to construct or implement such revisions.

5.11.6.4 The change order will identify the final VECP on which it is based.

5.11.7 VECP Price Adjustments - When a VECP is accepted under a contract, an adjustment in the contract price shall be made in accordance with Section 4.4 PRICE ADJUSTMENT. The adjustment shall first be established by determining the effect on the Contractor's cost of implementing the change, including any amount attributable to subcontractors and to the Department's charges to the Contractor for architectural, engineering, or other consultant services, and the staff time required to examine and review the proposal. The contract price shall then be reduced by fifty percent (50%) of the net estimated decrease in the cost of performance.

5.11.8 The Contractor may restrict the Department's right to use the data or information or both, on any sheet of a VECP or of the supporting data, submitted pursuant to this paragraph, if it is stated on that sheet as follows:

5.11.8.1 "This data or information or both shall not be disclosed outside the Department or be duplicated, used, or disclosed, in whole or in part, for any purpose other than to evaluate this VECP. This restriction shall not limit the Department's right to use this data or information or both if obtained from another source, or is otherwise available, without limitations. If this VECP is accepted by the Department by issuance of a change order after the use of this

data or information or both in such an evaluation, the Department shall have the right to duplicate, use and disclose any data or information or both pertinent to the proposal as accepted in any manner and for any purpose whatsoever and have others so do."

5.11.9 In the event of acceptance of a VECP, the Department shall have all rights to use, duplicate or disclose in whole or in part in any manner and for any purpose whatsoever, and to have or permit others to do so, any data or information or both reasonably necessary to fully utilize such proposal.

5.11.10 The Contractor shall submit with each VECP all required information and provide all additional information as may be required by the Engineer to evaluate and implement the VECP. The cost for preparing the VECP shall be the Contractor's responsibility, and any part of the Contractor's cost for implementing the change shall be due only when the proposal is accepted and a change order is issued.

5.11.11 If the services of the Department's architect, engineer or consultant is necessary to review and evaluate a VECP, the cost therefor shall be paid for by the Contractor.

5.11.12 Each VECP shall be evaluated as applicable to this contract, and past acceptance on another Department project for a similar item shall not be automatic grounds for approval.

5.11.13 The method by which the Contractor will share a portion of the cost savings from an accepted VECP shall be for this contract only, and no consideration shall be made for future acquisition, royalty type payment or collateral savings.

5.11.13.1 The Department may accept the proposed VECP in whole or in part. The Engineer shall issue a contract change order to identify and describe the accepted VECP.

5.12 SUBCONTRACTS - Nothing contained in the contract documents shall create a contractual relationship between the Department and any subcontractor.

5.12.1 Substituting Subcontractors - Contractors may enter into subcontracts only with subcontractors listed in the proposal or with non-listed joint contractors / subcontractors permitted under subsection 2.7.3. No subcontractor may be added or deleted and substitutions will be allowed only if the subcontractor:

5.12.1.1 Fails, refuses or is unable to enter into a subcontract; or

5.12.1.2 Becomes insolvent; or

5.12.1.3 Has its subcontractor's license suspended or revoked; or

5.12.1.4 Has defaulted or has otherwise breached the subcontract in connection with the subcontracted work; or

5.12.1.5 Is unable to comply with other requirements of law applicable to contractors, subcontractors and public works projects.

5.12.2 Requesting Approval to Substitute a Subcontractor - Requests to substitute a subcontractor shall be submitted to the Engineer for approval. Contractor agrees to hold the State harmless and indemnify the State for all claims, liabilities, or damages whatsoever, including attorney's fees arising out of or related to the approval or disapproval of the substitution.

5.12.3 Once a subcontractor's claim is established, should the Contractor intend to make the claim against the Department, it shall follow the procedure set forth under Section 7.25 DISPUTES AND CLAIMS.

5.12.4 Subcontracting - Contractor shall perform with its own organization, work amounting to not less than twenty (20%) of the total contract cost, exclusive of costs for materials and equipment the Contractor purchases for installation by its subcontractors, except that any items designated by the State in the contract as "specialty items" may be performed by a subcontract and the cost of any such specialty items so performed by the subcontract may be deducted from the total contract cost before computing the amount of work required to be performed by the Contractor with its own organization.

ARTICLE 6 - Control of Materials and Equipment

6.1 MATERIALS AND EQUIPMENT - Contractor shall furnish, pay for and install all material and equipment as called for in the drawings and specifications. Materials and equipment shall be new and the most suitable for the purpose intended unless otherwise specified. The State does not guarantee that the specified or pre-qualified product listed in the drawings and specifications are available at the time of bid or during the contract period.

6.2 SOURCE OF SUPPLY AND QUALITY OF MATERIALS

6.2.1 Only materials conforming to the drawings and specifications and, when required by the contract have been accepted by the Engineer, shall be used. In order to expedite the inspection and testing of materials, at the request of the Engineer, the Contractor shall identify its proposed sources of materials within ten (10) days after notification by the Engineer.

6.2.2 At the option of the Engineer, the materials may be accepted by the Engineer at the source of supply before delivery is started. Representative preliminary samples of the character and quantity prescribed shall be submitted by the Contractor or producer for examination and tested in accordance with the methods referred to under samples and tests.

6.2.3 Engineer's Authorization to Test Materials - Materials proposed to be used may be inspected and tested whenever the Engineer deems necessary to determine conformance to the specified requirements. The cost of testing shall be borne by the Contractor. However, should test results show that the material(s) is in compliance with the specified requirements, the cost of the testing will be borne by the State.

6.2.4 Unacceptable Materials - In the event material(s) are found to be unacceptable, the Contractor shall cease their use, remove the unacceptable material(s) that have already been installed or applied, and furnish acceptable materials all at no

additional cost to the State. No material which is in any way unfit for use shall be used.

6.3 SUBSTITUTION OF MATERIALS AND EQUIPMENT AFTER BID OPENING

6.3.1 Substitution of materials and equipment before bid opening - Refer to Section 2.6 SUBSTITUTION OF MATERIALS AND EQUIPMENT BEFORE BID OPENING. For materials and equipment submitted in compliance with Section 2.6, if after installing the substituted product, an unlisted variance is discovered, the Contractor shall immediately replace the product with a specified product at no cost to the State.

6.3.2 Substitution After Contract Award - Subject to the Engineer's determination if the material or equipment is equal to the one specified or prequalified, substitution of material or equipment may be allowed after the Letter of Award is issued only:

6.3.2.1 If the specified or prequalified item is delayed by unforeseeable contingencies beyond the control of the Contractor which would cause a delay in the project completion; or

6.3.2.2 If any specified or prequalified item is found to be unusable or unavailable due to a change by the manufacturer or other circumstances; or

6.3.2.3 If the Contractor desires to provide a more recently developed material, equipment, or manufactured model from the same named manufacturer than the one specified or prequalified; or

6.3.2.4 If the specified material and / or equipment inadvertently lists only a single manufacturer.

6.3.3 A substitution request after Contract Award shall be fully explained in writing. Contractor shall provide brochures showing that the substitute material and / or equipment is equal or better in essential features and also provide a matrix showing comparison of the essential features. Contractor shall justify its request and include quantities and unit prices involved, respective supplier's price quotations and such other documents necessary to fully support the request. Any savings in cost will be credited to the Department. Contractor shall absorb any additional cost for the substitute item(s) or for its installation. Submitting a substitution request, does not imply that substitutions, for brand name specified materials and equipment, will be allowed. The Engineer may reject and deny any request deemed irregular or not in the best interest of the Department. A request for substitution shall not in any way be grounds for an extension of contract time. At the discretion of the Engineer, a time extension may be granted for an approved substitution.

6.4 ASBESTOS CONTAINING MATERIALS - The use of materials or equipment containing asbestos is prohibited under this contract. Contractor warrants that all materials and equipment incorporated in the project are asbestos-free.

6.5 TEST SAMPLES

6.5.1 The Engineer may require any or all materials to be tested by means of samples or otherwise. Contractor shall collect and forward samples requested by the Engineer. Contractor shall not use or incorporate any material represented by the samples until all required tests have been made and the material has been accepted. In all cases, the Contractor shall furnish the required samples without charge. Where samples are required from the completed work, the Contractor shall cut and furnish samples from the completed work. Samples so removed shall be replaced with identical material and refinished. No additional compensation will be allowed for furnishing test samples and their replacement with new materials.

6.5.2 Tests of the material samples will be made in accordance with the latest standards of the American Society for Testing and Materials (ASTM), as amended prior to the contract date unless otherwise provided. In cases where a particular test method is necessary or specifications and serial numbers are stipulated, the test shall be made by the method stated in the above-mentioned publication. Where the test reference is the American Association of State Highway and Transportation Officials (AASHTO), it means the specifications and serial numbers of the latest edition and amendments prior to the bid date.

6.5.3 The Engineer may retest any materials which have been tested and accepted at the source of supply after the same has been delivered to the work site. The Engineer shall reject all materials which, when retested, do not meet the requirements of the contract.

6.6 MATERIAL SAMPLES

6.6.1 The Contractor shall furnish all samples required by the drawings and specifications or that may be requested by the Engineer of any and all materials or equipment it proposes to use. Unless specifically required, samples are not to be submitted with the bid.

6.6.2 No materials or equipment of which samples are required shall be used on the Work until the Engineer has received and accepted the samples. If the Contractor proceeds to use such materials before the Engineer accepts the samples, the Contractor shall bear the risk.

6.6.3 Contractor shall furnish two (2) copies of a transmittal letter with each shipment of samples, The letter shall provide a list of the samples, the name of the building or work for which the materials are intended and the brands of the materials and names of the manufacturers. Also, each sample submitted shall have a label indicating the material represented, its place of origin, the names of the producer, the Contractor and the building or work for which the material is intended. Samples of finished materials shall be marked to indicate where the materials represented are required by the drawings or specifications.

6.6.4 Acceptance of any sample(s) shall be only for the characteristics or for the uses named in such acceptance and for no other purpose. Acceptance of samples shall not change or modify any contract requirement. All samples will be provided by the Contractor at no extra cost to the Department. See also Section 5.4 SHOP DRAWINGS AND OTHER SUBMITTALS.

6.7 NON-CONFORMING MATERIALS - All materials not conforming to the requirements of these contract

documents, whether in place or not, shall be rejected and removed immediately from the site of work unless otherwise permitted by the Engineer in writing. No rejected material which has subsequently been made to conform shall be used unless and until written acceptance has been given by the Engineer. If the Contractor fails to comply forthwith with any order of the Engineer made under the provisions of this Section 6.7, the Engineer shall have the authority to remove and replace non-conforming materials and charge the cost of removal and replacement to the Contractor.

6.8 HANDLING MATERIALS - Contractor shall handle all materials to preserve their quality and fitness for work. Transport aggregates from the source or storage site to the work in tight vehicles to prevent loss or segregation of materials after loading and measuring.

6.9 STORAGE OF MATERIALS - Contractor shall store all materials to preserve their quality and fitness for the work. Unless otherwise provided, any portion of the project site within the Project Contract Limit not required for public travel, may be used for storage purposes and for the Contractor's plant and equipment. Any additional space required shall be provided by the Contractor at its expense subject to the Engineer's acceptance. Contractor shall store materials on wooden platforms or other hard, clean surfaces and covered to protect it from the weather and damage. Stored materials shall be located to allow prompt inspection.

6.10 PROPERTY RIGHTS IN MATERIALS - Nothing in the contract shall be construed to vest in the Contractor any right to any materials and equipment after such materials and equipment have been attached, affixed to, or placed in the work.

6.11 ASSIGNMENT OF ANTITRUST CLAIMS FOR OVERCHARGES FOR GOODS PURCHASED - Contractor (or Vendor) and the Department recognize that in actual economic practice, overcharges resulting from antitrust violations are in fact usually borne by the Department. Therefore, Contractor hereby assigns to the Department any and all claims for such overcharges as to goods purchased in connection with this order or contract, except as to overcharges which result from antitrust violations commencing after the price is established under this order or contract and any change order. In addition, Contractor warrants and represents that each of its first tier suppliers and subcontractors shall assign any and all such claims to the Department, subject to the aforementioned exception.

ARTICLE 7 - Prosecution and Progress

(Including Legal Relations And Responsibility)

7.1 PROSECUTION OF THE WORK

7.1.1 After approval of the contract by the Comptroller, a Notice to Proceed will be given to the Contractor as described in Section 3.10 NOTICE TO PROCEED. The Notice to Proceed will indicate the date the Contractor is expected to begin the construction and from which date contract time will be charged.

7.1.2 The Contractor shall begin work no later than ten (10) working days from the date in the Notice to Proceed and shall diligently prosecute the same to completion within the contract time allowed. The Contractor shall notify the Engineer at least three (3) working days before beginning work.

7.1.3 If any subsequent suspension and resumption of work occurs, the Contractor shall notify the Engineer at least twenty-four (24) hours before stopping or restarting actual field operations.

7.1.4 Working Prior to Notice to Proceed - The Contractor shall not begin work before the date in the Notice to Proceed. Should the Contractor begin work before receiving the Notice to Proceed, any work performed in advance of the specified date will be considered as having been done at the Contractor's risk and as a volunteer and subject to the following conditions:

7.1.4.1 Under no circumstances shall the Contractor commence work on site until it has notified the Engineer of its intentions and has been advised by the Engineer in writing that the project site is available to the Contractor. The project site will not be made available until the Contractor has complied with commencement requirements under Section 7.2 COMMENCEMENT REQUIREMENTS.

7.1.4.2 In the event the contract is not executed, the Contractor shall, at its own expense, do such work as is necessary to leave the site in a neat condition to the satisfaction of the Engineer. The Contractor shall not be reimbursed for any work performed.

7.1.4.3 All work done prior to the Notice to Proceed shall be performed in accordance with the contract documents, but will only be considered authorized work and be paid for as provided in the contract after the Notice to Proceed is issued.

7.1.5 For repairs and/or renovations of existing buildings, unless otherwise permitted by the Engineer, the Contractor shall not commence with the physical construction unless all or sufficient amount of materials are available for either continuous construction or completion of a specified portion of the work. When construction is started, the Contractor shall work expeditiously and pursue the work diligently until it is complete. If only a portion of the work is to be done in stages, the Contractor shall leave the area safe and usable for the user agency at the end of each stage.

7.2 COMMENCEMENT REQUIREMENTS - Prior to beginning work on site, the Contractor shall submit the following to the Engineer:

7.2.1 Identification of the Superintendent or authorized representative on the job site. Refer to Section 5.8 COOPERATION BETWEEN THE CONTRACTOR AND THE DEPARTMENT.

7.2.2 Proposed Working Hours on the job. Refer to Section 7.5 NORMAL WORKING HOURS.

7.2.3 Permits and Licenses. Refer to Section 7.4 PERMITS AND LICENSES.

7.2.4 **Schedule of Prices** to be accepted for the agreed Monthly Payment Application. Unless the proposal provides unit price bids on all items in this project, the successful Bidder will be required, after the award of contract, to submit a schedule of prices for the various items of construction included in the contract. For projects involving more than a single building and / or facility, the breakdown cost shall reflect a separate schedule of prices for the various items of work for each building and/or facility. The sum of the prices submitted for the various items must equal the lump sum bid in the Bidder's proposal. This schedule will be subject to acceptance by the Engineer who may reject same and require the bidder to submit another or several other schedules if in the Engineer's opinion the prices are unbalanced or not sufficiently detailed. This schedule of prices shall be used for the purpose of determining the value of monthly payments due the Contractor for work installed complete in place; and may be used as the basis for determining cost and credit of added or deleted items of work, respectively.

7.2.4.1 The Contractor shall estimate at the close of each month the percentage of work completed under each of the various construction items during such month and submit the Monthly Payment Application to the Engineer for review and approval. The Contractor shall be paid the approved percentage of the price established for each item less the retention provided in Section 8.4 PROGRESS AND/OR PARTIAL PAYMENTS.

7.2.5 **Proof of Insurance Coverage**. Certificate of Insurance or other documentary evidence satisfactory to the Engineer that the Contractor has in place all insurance coverage required by the contract. Refer to Section 7.3 INSURANCE REQUIREMENTS.

7.2.6 Until such time as the above items are processed and approved, the Contractor shall not be allowed to commence on any operations unless authorized by the Engineer.

7.3 INSURANCE REQUIREMENTS

7.3.1 **Obligation of Contractor** - Contractor shall not commence any work until it obtains, at its own expense, all required herein insurance. Such insurance shall be provided by an insurance company authorized by the laws of the State to issue such insurance in the State of Hawaii. Coverage by a "Non-Admitted" carrier is permissible provided the carrier has a Best's Rating of "A-VII" or better.

7.3.2 All insurance described herein will be maintained by the Contractor for the full period of the contract and in no event will be terminated or otherwise allowed to lapse prior to written certification of final acceptance of the work by the State.

7.3.3 Certificate(s) of Insurance acceptable to the State shall be filed with the Engineer prior to commencement of the work. Certificates shall identify if the insurance company is a "captive" insurance company or a "Non-Admitted" carrier to the State of Hawaii. The best's rating must be stated for the "Non-Admitted" carrier. Certificates shall contain a provision that coverages being certified will not be cancelled or materially changes without giving the Engineer at least thirty (30) days prior written notice. If the State is to be an Additional Insured on any of the required insurance, it shall be so noted on the certificate. Should any policy be canceled before final acceptance of the work by the State, and the Contractor fails to immediately procure replacement insurance as specified, the State, in addition to all other remedies it may have for such breach, reserves the right to procure such insurance and deduct the cost thereof from any money due to the Contractor.

7.3.4 Nothing contained in these insurance requirements is to be construed as limiting the extent of Contractor's responsibility for payment of damages resulting from its operations under this contract, including the Contractor's obligation to pay liquidated damages, nor shall it affect the Contractor's separate and independent duty to defend, indemnify and hold the State harmless pursuant to other provisions of this contract. In no instance will the State's exercise of an option to occupy and use completed portions of the work relieve the Contractor of its obligation to maintain the required insurance until the date of final acceptance of the work.

7.3.5 All insurance described herein shall be primary and cover the insured for all work to be performed under the contract, all work performed incidental thereto or directly or indirectly connected therewith, including traffic detour work or other work performed outside the work area and all change order work.

7.3.6 The Contractor shall, from time to time, furnish the Engineer, when requested, satisfactory proof of coverage of each type of insurance required covering the work. Failure to comply with the Engineer's request may result in suspension of the work, and shall be sufficient grounds to withhold future payments due the Contractor and to terminate the contract for Contractor's default.

7.3.7 **Types of Insurance** - Contractor shall purchase and maintain insurance described below which shall provide coverage against claims arising out of the Contractor's operations under the contract, whether such operations be by the Contractor itself or by any subcontractor or by anyone directly or indirectly employed by any of them or by anyone for whose acts any of them may be liable.

7.3.7.1 Worker's Compensation -The Contractor shall obtain worker's compensation insurance for all persons whom they employ in carrying out the work under this contract. This insurance shall be in strict conformity with the requirements of the most current and applicable State of Hawaii Worker's Compensation Insurance laws in effect on the date of the execution of this contract and as modified during the duration of the contract.

7.3.7.2 General Liability - The Contractor shall obtain General Liability insurance with a limit of not less than $2,000,000 per occurrence and in the Aggregates. The General liability insurance shall include the State as an Additional Insured. The required limit of insurance may be provided by a single policy or with a combination of primary and excess polices. Refer to SPECIAL CONDITIONS for any additional requirements.

7.3.7.3 Auto Liability - The Contractor shall obtain Auto Liability Insurance covering all owned, non-owned and hired autos with a Combined single Limit of not less than $1,000,000 per occurrence. The required limit of insurance may be provided by a single policy or with a combination of

primary and excess polices. Refer to SPECIAL CONDITIONS for any additional requirements.

7.3.7.4 Property Insurance (Builders Risk)

(a) New Building(s) - The Contractor shall obtain Property Insurance covering building(s) being constructed under this Contract. The limit shall be equal to the completed value of the building(s) and shall insure against all-loss excluding earthquakes and floods. The coverage shall be provided by a company authorized to write insurance in the State of Hawaii as an insurer. If the project falls within the State University System, The University of Hawaii shall be named as an insured. Refer to SPECIAL CONDITIONS for any additional requirements.

(b) Building Renovation and / or Installation Contract - The Contractor shall obtain Property Insurance with a limit equal to the completed value of the work or property being installed and shall insure against all-loss excluding earthquakes and floods. The coverage shall be provided by a company authorized to write insurance in the State of Hawaii as an insurer. If the project falls within the State University System, The University of Hawaii shall be named as an insured. Refer to SPECIAL CONDITIONS for any additional requirements.

(c) The Contractor is not required to obtain property insurance for contracts limited to site development

7.4 PERMITS AND LICENSES

7.4.1 The State or its representative may process Federal (e.g. Corps of Engineers), State and County Permit applications. The Contractor shall pick up the pre-processed Permits at the appropriate governmental agency and pay the required fees. Other permits necessary for the proper execution of the work such as utility connection permits, elevator installation permits etc., unless processed by the State and paid for by the Contractor, shall be obtained and paid for by the Contractor.

7.4.2 Until such time as the above permits are approved, the Contractor shall not be allowed to commence any operations without written approval of the Engineer.

7.4.3 The Engineer reserves the right to waive application and processing of the building permit.

7.5 NORMAL WORKING HOURS - Prior to beginning operations, unless otherwise established by the State, the Contractor shall notify the Engineer in writing of the time in hours and minutes, A.M. and P.M. respectively, at which it desires to begin and end the day's work. If the Contractor desires to change the working hours, it shall request the Engineer's approval three (3) consecutive working days prior to the date of the change.

7.6 HOURS OF LABOR (Section 104-2 Hawaii Revised Statutes)

7.6.1 No laborer or mechanic employed on the job site of any public work of the Department or any political sub-division thereof shall be permitted or required to work on Saturday, Sunday or a legal holiday of the State or in excess of eight hours on any other day unless the laborer or mechanic receives overtime compensation for all hours worked on Saturday, Sunday and a legal holiday of the State or in excess of eight hours on any other day. For the purposes of determining overtime compensation under this Section 7.6, the basic hourly rate of any laborer or mechanic shall not be less than the basic hourly rate determined by the Department of Labor and Industrial Relations to be the prevailing basic hourly rate for corresponding classes of laborers and mechanics on projects of similar character in the Department.

7.6.2 Overtime compensation means, compensation based on one and one-half times the laborers or mechanics basic hourly rate of pay plus the cost to an employer of furnishing a laborer or mechanic with fringe benefits.

7.7 PREVAILING WAGES - (§ 104-2 HRS)

7.7.1 The Contractor shall at all times observe and comply with all provisions of Chapter 104, HRS, the significant requirements of which are emphasized in the Department of Labor and Industrial Relations Publication No. H104-3 entitled 'Requirements of Chapter 104, HRS Wages and Hours of Employees on Public Works Law'.

7.7.2 Wage Rate Schedule - The wage rate schedule is not physically enclosed in the bid documents. However, the wage rate schedule is incorporated herein by reference and made a part of the Bid and Contract Documents. Said wage rate schedule may be obtained from the Contracts Office, Department of Accounting and General Services, 1151 Punchbowl Street, Room 422, Honolulu, Hawaii or, via the FAX-ON-DEMAND system of the Department of Labor and Industrial Relations, phone number (808) 586-8695. When the bid documents are made available on respective neighbor islands, copies of the wage rate schedule may also be obtained from the office of the respective neighbor island DAGS District Office.

7.7.3 The Contractor or its subcontractor(s) shall pay all laborers and mechanics employed on the job site, unconditionally and not less often than once a week, and without deduction or rebate on any account except as allowed by law, the full amounts of their wages including overtime, accrued to not more than five (5) working days prior to the time of payment, at wage rates not less than those stated in the contract, regardless of any contractual relationship which may be alleged to exist between the Contractor and subcontractor and such laborers and mechanics. The wages stated in the contract shall not be less than the minimum prevailing wages (basic hourly rate plus fringe benefits), as determined by the Director of Labor and Industrial Relations and published in wage rate schedules. Any increase in wage rates, as determined by the Director of Labor and Industrial Relations and issued in the wage rate schedule, shall be applicable during the performance of the contract, in accordance with section 104-2(a) and (b), Hawaii Revised Statutes. Notwithstanding the provisions of the original contract, if the Director of Labor and Industrial Relations determines that prevailing wages have increased during the performance of the contract, the rate of pay of laborers and mechanics shall be raised accordingly.

7.7.4 The applicable wage rate schedule shall be physically included in the Contract Documents executed by the successful Bidder.

7.7.5 **Posting Wage Rate Schedule** - The rates of wages to be paid shall be posted by the Contractor in a prominent and easily accessible place at the job site and a copy of such wages required to be posted shall be given to each laborer and mechanic employed under the contract by the Contractor at the time the person is employed thereunder, provided that where there is a collective bargaining agreement, the Contractor does not have to provide its employees the wage rate schedules. Any revisions to the schedule of wages issued by the Director of Labor and Industrial Relations during the course of the contract shall also be posted by the Contractor and a copy provided to each laborer and mechanic employed under the contract as required above.

7.7.6 The Comptroller may withhold from the Contractor so much of the accrued payments as the Comptroller may consider necessary to pay to laborers and mechanics employed by the Contractor or any subcontractor on the job site. The accrued payments withheld shall be the difference between the wages required by this contract and the wages actually received by such laborers or mechanics.

7.8 FAILURE TO PAY REQUIRED WAGES (§ 104-4, HRS) - If the Department finds that any laborer or mechanic employed on the job site by the Contractor or any subcontractor has been or is being paid wages at a rate less than the required rate by the contract, or has not received their full overtime compensation, the Department may, by written notice to the Contractor, terminate its right, or the right of any subcontractor, to proceed with the work or with the part of the work on which the required wages or overtime compensation have not been paid and may complete such work or part by contract or otherwise, and the Contractor and its sureties shall be liable to the Department for any excess costs occasioned thereby.

7.9 PAYROLLS AND PAYROLL RECORDS (§ 104-3 HRS)

7.9.1 A certified copy of each weekly payroll shall be submitted to the Comptroller within seven (7) calendar days after the end of each weekly payroll period. Failure to do so on a timely basis shall be cause for disqualification from bidding in accordance with the provisions of Section 2.12 DISQUALIFICATION OF BIDDERS. The Contractor shall be responsible for the timely submission of certified copies of payrolls of all subcontractors. The certification shall affirm that payrolls are correct and complete, that the wage rates contained therein are not less than the applicable rates contained in the wage determination decision, any amendments thereto during the period of the contract, and that the classifications set forth for each laborer and mechanic conform with the work they performed.

7.9.2 Payroll records for all laborers and mechanics working at the site of the work shall be maintained by the General Contractor and its subcontractors, if any, during the course of the work and preserved for a period of four (4) years thereafter. Such records shall contain the name of each employee, their correct classification, rate of pay, daily and weekly number of hours worked, itemized deductions made and actual wages paid. Such records shall be made available for inspection at a place designated by the Comptroller, the Director of Labor and any authorized persons who may also interview employees during working hours on the job site.

7.9.3 Note that the falsification of certifications noted in this Section 7.9 may subject the Contractor or subcontractor to penalties and debarment under the laws referenced in Section 7.14 LAWS TO BE OBSERVED and / or criminal prosecution.

7.10 OVERTIME AND NIGHT WORK

7.10.1 Overtime work shall be considered as work performed in excess of eight (8) hours in any one day or work performed on Saturday, Sunday or legal holiday of the State. Overtime and night work are permissible when approved by the Engineer in writing, or as called for elsewhere within these GENERAL CONDITIONS.

7.10.2 **Overtime Notification** - Contractor shall inform the Engineer in writing at least two (2) working days in advance as to exactly what specific work is to be done during any overtime and night period to insure that proper inspection will be available.

7.10.3 In the event that work other than that contained in the above notification is performed and for which the Engineer determines State inspection services were necessary but not available because of the lack of notification, the Contractor may be required to remove all such work and perform the work over again in the presence of State inspection personnel.

7.10.4 Any hours worked in excess of the normal eight (8) working hours per day or on Saturdays, Sundays or legal State holidays will not be considered a working day.

7.10.5 The State hereby reserves the right to cancel the overtime, night, Saturday, Sunday or legal State holiday work when it is found that work during these periods is detrimental to the public welfare or the user agency.

7.11 OVERTIME AND NIGHT PAYMENT FOR STATE INSPECTION SERVICE

7.11.1 Whenever the Contractor's operations require the State's inspection and staff personnel to work overtime or at night, the Contractor shall reimburse the State for the cost of such services unless otherwise instructed in the Contract. The Engineer will notify the Contractor of the minimum number of required Department employees and other personnel engaged by the Department prior to the start of any such work. The costs chargeable to the Contractor shall include but not be limited to the following:

7.11.1.1 The cost of salaries which are determined by the State and includes overtime and night time differential for the Department's staff and inspection personnel. In addition to the cost of the salaries, the Contractor shall reimburse the State's share of contributions to the employee's retirement, medical plan, social security, vacation, sick leave, worker's compensation funds, per diem, and other applicable fringe benefits and overhead expenses.

7.11.1.2 The transportation cost incurred by the Department's staff and inspection personnel which are based

on established rental rates or mileage allowance in use by the Department for the particular equipment or vehicle.

7.11.1.3 Fees and other costs billed the State by Consultants engaged on the project for overtime and/or night time work.

7.11.2 Payment for Inspection Services - The monies due the Department for staff and inspection work and use of vehicles and equipment as determined in subsection 7.11.1 shall be deducted from the monies due or to become due the Contractor. In any and all events, the Contractor shall not pay the Department's employees directly.

7.12 LIMITATIONS OF OPERATIONS

7.12.1 Contractor shall at all times conduct the work in such manner and in such sequence as will insure the least practicable interference with pedestrian and motor traffic passageways. The Contractor shall furnish convenient detours and provide and plan all other appropriate signs, flashers, personnel, warnings, barricades and other devices for handling pedestrian and motor traffic.

7.12.2 In the event that other contractors are also employed on the job site, the Contractor shall arrange its work and dispose of materials so as not to interfere with the operations of the other contractors engaged upon adjacent work. The Contractor shall join its work to that of others and existing buildings in a proper manner, and in accordance with the drawings and specifications, and perform its work in the proper sequence in relation to that of others, all as may be directed by the Engineer.

7.12.3 Each Contractor shall be responsible for any damage done by it to work performed by another contractor. Each Contractor shall so conduct its operations and maintain the work in such condition that adequate drainage shall be in effect at all times.

7.12.4 In the event that the Contractor fails to prosecute its work as provided in this Section 7.12 or disregards the directions of the Engineer, the Engineer may suspend the work until such time as the Contractor provides for the prosecution of the work with minimum interference to traffic and passageways or other contractors, adequate drainage, the repair of damage and complies with the direction of the Engineer. No payment will be made for the costs of such suspension.

7.13 ASSIGNMENT OR CHANGE OF NAME §3-125-14 HAR

7.13.1 Assignment - The Contractor shall not sublet, sell, transfer, assign or otherwise dispose of this contract or any part hereof or any right, title or interest herein or any monies due or to become due hereunder without the prior written consent of the Comptroller.

7.13.2 The Contractor may assign money due or to become due it under the contract and such assignment will be recognized by the Department, if given proper notice thereof, to the extent permitted by law; but any assignment of monies shall be subject to all proper set-offs in favor of the State and to all deductions provided in the contract and particularly all monies withheld or unpaid, whether assigned or not, shall be to use by the Department for the completion of the work in the event that the Contractors should be in default therein.

7.13.3 Recognition of a Successor in Interest; Assignment - When in the best interest of the State, a successor in interest may be recognized in an assignment agreement in which the transferor and the transferee and the State shall agree that:

7.13.3.1 The transferee assumes all of the transferor's obligations;

7.13.3.2 Transferor remains liable for all obligations under the contract but waives all rights under the contract against the State; and

7.13.3.3 The transferor shall continue to furnish, and the transferee shall also furnish, all required bonds.

7.13.4 Change of Name - When a Contractor requests to change the name in which it holds a contract with the State, the Comptroller shall, upon receipt of a document indicating such change of name (for example: an amendment to the articles of incorporation of the corporation), enter into an agreement with the requesting Contractor to effect such a change of name. The agreement changing the name shall specifically indicate that no other terms and conditions of the contract are thereby changed.

7.13.5 All change of name or novation agreements effected hereunder other than by the Comptroller shall be reported to the Comptroller within thirty (30) days of the date that the agreement becomes effective.

7.13.6 Notwithstanding the provisions of paragraphs 7.13.3.1 through 7.13.3.3 above, when a Contractor holds contracts with more than one purchasing agency of the State, the novation or change of name agreements herein authorized shall be processed only through the Comptroller.

7.14 LAWS TO BE OBSERVED

7.14.1 The Contractor at all times shall observe and comply with all Federal, State and local laws or ordinances, rules and regulations which in any manner affect those engaged or employed in the work, the materials used in the work, and the conduct of the work. The Contractor shall also comply with all such orders and decrees of bodies or tribunals having any jurisdiction or authority over the work. Any reference to such laws, ordinances, rules and regulations shall include any amendments thereto before and after the date of this contract.

7.14.2 The Contractor shall defend, protect, hold harmless and indemnify the State and its Departments and Agencies and all their officers, representatives, employees or agents against any claim or liability arising from or based on the violation of any such laws, ordinances, rules and regulations, orders or decrees, whether such violation is committed by the Contractor or its Subcontractor(s) or any employee of either or both. If any discrepancy or inconsistency is discovered in the contract for the work in relation to any such laws, ordinances, rules and regulations, orders or decrees, the Contractor shall forthwith report the same to the Engineer in writing.

7.14.3 While the Contractor must comply with all applicable laws, attention is directed to: Wage and Hours of Employees on Public Works, Chapter 104, Hawaii Revised Statutes (HRS);

Hawaii Public Procurement Code, Authority to debar or suspend, Section 103D-702, HRS; Hawaii Employment Relations Act, Chapter 377, HRS; Hawaii Employment Security Law, Chapter 383, HRS; Worker's Compensation Law, Chapter 386, HRS; Wage and Hour Law, Chapter 387, HRS; Occupational Safety and Health, Chapter 396, HRS; and Authority to Debar or Suspend, Chapter 126, subchapter 2, Hawaii Administrative Rules (HAR).

7.15 PATENTED DEVICES, MATERIALS AND PROCESSES - If the Contractor desires to use any design, device, material, or process covered by letters of patent or copyright, the right for such use shall be procured by the Contractor from the patentee or owner. The Contractor shall defend, protect, indemnify and hold harmless the State and its Departments and Agencies, any affected third party, or political subdivision from any and all claims for infringement by reason of the use of any such patented design, device, material or process, or any trademark or copyright in connection with the work to be performed under the contract, shall defend, protect, indemnify and hold harmless the State and its Departments and Agencies for any costs, expenses and damages which it may be obligated to pay by reason of any such infringement at any time during the prosecution or after the completion of the work. This section shall not apply to any design, device, material or process covered by letters of patent or copyright, which the Contractor is required to use by the drawings or specifications.

7.16 SANITARY, HEALTH AND SAFETY PROVISIONS

7.16.1 The Contractor shall provide and maintain in a neat, sanitary condition such accommodations for the use of its employees as may be necessary to comply with the requirements of the State and local Boards of Health, or other bodies or tribunals having jurisdiction. Unless otherwise stated in the drawings or specifications, the Contractor shall install toilet facilities conveniently located at the job site and maintain same in a neat and sanitary condition for the use of the employees on the job site for the duration of the contract. The toilet facilities shall conform to the requirements of the State Department of Health. The cost of installing, maintaining and removing the toilet facilities shall be considered incidental to and paid for under various contract pay items for work or under the lump sum bids as the case may be, and no additional compensation will be made therefor. These requirements shall not modify or abrogate in any way the requirements or regulations of the State Department of Health.

7.16.2 Attention is directed to Federal, State and local laws, rules and regulations concerning construction safety and health standards. The Contractor shall not require any worker to work in surroundings or under conditions which are unsanitary, hazardous or dangerous to their health or safety.

7.17 PROTECTION OF PERSONS AND PROPERTY

7.17.1 Safety Precautions and Programs - The Contractor shall be responsible for initiating, maintaining and supervising all safety precautions and programs in connection with the performance of the Contract. The Contractor shall take reasonable precautions for the safety of, and shall provide reasonable protection to prevent damage, injury or loss to:

7.17.1.1 All persons on the Work site or who may be affected by the Work;

7.17.1.2 All the Work and materials and equipment to be incorporated therein, whether in storage on or off the site, under care, custody or control of the Contractor and its subcontractors; and

7.17.1.3 Other property at the site or adjacent thereto, including trees, shrubs lawns walks pavement, roadways structures, and utilities not designated for removal, relocation or replacement in the course of construction.

7.17.2 Contractor shall give notices and comply with applicable laws, ordinances, regulations, rules, and lawful orders of any public body having jurisdiction for the safety of persons or property or their protection from damage, injury or loss; and the Contractor shall erect and maintain reasonable safeguards for safety and protection, including posting danger signs, or other warnings against hazards.

7.17.3 The Contractor shall notify Owners of adjacent properties and of underground (or overhead) utilities when performing work which may affect the Owners; and shall cooperate with the Owners in the protection, removal and replacement of their property.

7.17.4 All damage, injury or loss to any property referred to in paragraphs 7.17.1.2 and 7.17.1.3 caused by the fault or negligence or damage or loss attributable to acts or omissions directly or indirectly in whole or part by the Contractor a subcontractor or any one directly or indirectly employed by them, or by anyone for whose acts they might be liable, shall be remedied promptly by the Contractor.

7.17.5 The Contractor shall designate a responsible member of the Contractor's organization at the site whose duty shall be the protection of accidents. This person shall be the Contractor's superintendent unless otherwise designated by the Contractor

7.17.6 The Contractor shall not load or permit any part of the construction to be loaded so as to endanger its safety. The Contractor shall not injure or destroy trees or shrubs nor remove or cut them without permission of the Engineer. Contractor shall protect all land monuments and property marks until an authorized agent has witnessed or otherwise referenced their location and shall not remove them until directed.

7.17.7 In the event the Contractor encounters on the site, material reasonably believed to be asbestos or other hazard material that has not been rendered harmless, the Contractor shall stop work in the area and notify the Engineer promptly. The work in the affected area shall be resumed in the absence of hazard materials or when the hazzard has been rendered harmless.

7.17.8 Emergencies - In an emergency affecting the safety and protection of persons or the Work or property at the site or adjacent thereto, Contractor without special instructions or authorization from the Engineer, shall act, at the Contractor's discretion, to prevent threatened damage, injury or loss. Contractor shall give the Engineer prompt written notice of the emergency and actions taken. Additional compensation or extension of time claimed by the Contractor on account of an

emergency shall be determined under the provisions of Section 7.25 DISPUTES AND CLAIMS.

7.18 ARCHAEOLOGICAL SITES

7.18.1 Should historic sites such as walls, platforms, pavements and mounds, or remains such as artifacts, burials, concentration of charcoal or shells be encountered during construction, work shall cease in the immediate vicinity of the find and the find shall be protected from further damage. The Contractor shall immediately notify the Engineer and contact the State Historic Preservation Division which will assess the significance of the find and recommend the appropriate mitigation measures, if necessary.

7.18.2 When required, the Contractor shall provide and install any temporary fencing as shown on the drawings to protect archaeological sites within the project. The fencing shall be installed prior to any construction activity and shall be maintained by the Contractor for the duration of the project. Fence installation and maintenance shall be to the satisfaction of the Engineer. The Contractor shall remove the fencing upon completion of construction, or as directed by the Engineer.

7.18.3 No work shall be done within the temporary fencing area. If any construction work is done within the temporary fencing, the Contractor shall notify the Engineer immediately; and if the Contractor entered the archaeological site area without permission, it shall stop work in this area immediately. The Engineer shall notify the archaeologist to assess any damage to the area. The Contractor shall allow the archaeologist sufficient time to perform the field investigation.

7.18.4 Any site requiring data recovery within the project shall not be disturbed until data recovery is completed.

7.19 RESPONSIBILITY FOR DAMAGE CLAIMS; INDEMNITY

7.19.1 The Contractor shall indemnify the State and the Department against all loss of or damage to the State's or the Department's existing property and facilities arising out of any act or omission committed in the performance of the work by the Contractor, any subcontractor or their employees and agents. Contractor shall defend, hold harmless and indemnify the Department and the State, their employees, officers and agents against all losses, claims, suits, liability and expense, including but not limited to attorneys' fees, arising out of injury to or death of persons (including employees of the State and the Department, the Contractor or any subcontractor) or damage to property resulting from or in connection with performance of the work and not caused solely by the negligence of the State or the Department, their agents, officers and employees. The State or the Department may participate in the defense of any claim or suit without relieving the Contractor of any obligation hereunder. The purchase of liability insurance shall not relieve the Contractor of the obligations described herein.

7.19.2 The Contractor agrees that it will not attempt to hold the State and its Departments and Agencies and their officers, representatives, employees or agents, liable or responsible for any losses or damages to third parties from the action of the elements, the nature of the work to be done under these GENERAL CONDITIONS or from any unforeseen obstructions, acts of God, vandalism, fires or encumbrances which may be encountered in the prosecution of the work.

7.19.3 The Contractor shall pay all just claims for materials, supplies, tools, labor and other just claims against the Contractor or any subcontractor in connection with this contract and the surety bond will not be released by final acceptance and payment by the Department unless all such claims are paid or released. The Department may, but is not obligated to, withhold or retain as much of the monies due or to become due the Contractor under this contract considered necessary by the Engineer to cover such just claims until satisfactory proof of payment or the establishment of a payment plan is presented.

7.19.4 The Contractor shall defend, indemnify and hold harmless the State and its Departments and Agencies and their officers, representatives, employees or agents from all suits, actions or claims of any character brought on account of any claims or amounts arising out of or recovered under the Workers' Compensation Laws or violation of any other law, by-law, ordinance, order or decree.

7.20 CHARACTER OF WORKERS OR EQUIPMENT

7.20.1 The Contractor shall at all times provide adequate supervision and sufficient labor and equipment for prosecuting the work to full completion in the manner and within the time required by the contract.

7.20.2 Character and Proficiency of Workers - All workers shall possess the proper license and / or certification, job classification, skill and experience necessary to properly perform the work assigned to them. All workmen engaged in special work or skilled work such as bituminous courses or mixtures, concrete pavement or structures, electrical installation, plumbing installation, or in any trade shall have sufficient experience in such work and in the operation of the equipment required to properly and satisfactorily perform all work. All workers shall make due and proper effort to execute the work in the manner prescribed in these GENERAL CONDITIONS, otherwise, the Engineer may take action as prescribed herein.

7.20.2.1 Any worker employed on the project by the Contractor or by any subcontractor who, in the opinion of the Engineer, is not careful and competent, does not perform its work in a proper and skillful manner or is disrespectful, intemperate, disorderly or neglects or refuses to comply with directions given, or is otherwise objectionable shall at the written request of the Engineer, be removed forthwith by the Contractor or subcontractor employing such worker and shall not be employed again in any portion of the work without the written consent of the Engineer. Should the Contractor or subcontractor continue to employ, or again employ such person or persons on the project, the Engineer may withhold all payments which are or may become due, or the Engineer may suspend the work until the Engineer's orders are followed, or both.

7.20.3 Insufficient Workers - A sufficient number of workers shall be present to ensure the work is accomplished at an acceptable rate. In addition, the proper ratio of apprentice to journey worker shall be maintained to ensure the work is properly supervised and performed. In the event that the Engineer finds insufficient workers are present to accomplish

the work at an acceptable rate of progress or if a adequate number of journey workers are not present and no corrective action is taken by the Contractor after being informed in writing, the Engineer may terminate the contract as provided for under Section 7.27 TERMINATION OF CONTRACT FOR CAUSE.

7.20.4 Equipment Requirements - All equipment furnished by the Contractor and used on the work shall be of such size and of such mechanical condition that the work can be performed in an acceptable manner at a satisfactory rate of progress and the quality of work produced will be satisfactory.

7.20.4.1 Equipment used on any portion of the project shall be such that no injury to the work, persons at or near the site, adjacent property or other objects will result from its use.

7.20.4.2 If the Contractor fails to provide adequate equipment for the work, the contract may be terminated as provided under Section 7.27 TERMINATION OF CONTRACT FOR CAUSE.

7.20.4.3 In the event that the Contractor furnishes and operates equipment on a force-account basis, it shall be operated to obtain maximum production under the prevailing conditions.

7.21 CONTRACT TIME

7.21.1 Time is of the essence for this contract.

7.21.2 Calculation of Contract Time - When the contract time is on a working day basis, the total contract time allowed for the performance of the work shall be the number of working days shown in the contract plus any additional working days authorized in writing as provided hereinafter. Refer to Article 1 DEFINITIONS for the definition of Working Day. The count of elapsed working days to be charged against contract time, shall begin from the date of Notice to Proceed and shall continue consecutively to the date of Project Acceptance determined by the Engineer. When the contract completion time is a fixed calendar date, it shall be the date on which all work on the project shall be completed. Maintenance periods are not included within the contract time unless specifically noted in the Contract Documents.

7.21.3 Modifications of Contract Time
§3-125-4 HAR

7.21.3.1 Extensions - For increases in the scope for work caused by alterations and additional work made under Section 4.2 CHANGES, the Contractor will be granted a time extension only if the changes increase the time of performance for the Contract. If the Contractor believes that an extension of time is justified and is not adequately provided for in a Field Order, it must request the additional time sought in writing when the detailed cost breakdown required by Section 4.2 CHANGES, is submitted. The Contractor must show how the time of performance for the critical path will be affected and must also support the time extension request with schedules and statements from its subcontractors, suppliers, and/or manufacturers. Compensation for any altered or additional work will be paid as provided in Section 4.2 CHANGES.

7.21.3.2 The Department may direct changes to the work at any time until the work is finally accepted. The issuance of a Field Order at any time may alter or modify the contract duration only by the days specified therein; or if not specified therein, for the days the critical path must be extended for the change. Additional time to perform the extra work will be added to the time allowed in the contract without regard to the date the change directive was issued, even if the contract completion date has passed. A change requiring time will not constitute a waiver of pre-existing Contractor delay.

7.21.4 Delay for Permits - For delays beyond the control of the Contractor in obtaining necessary permits, one day extension for each day delay may be granted by the Engineer, provided the Contractor notifies the Engineer that the permits are not available, as soon as the delay occurs. Time extensions shall be the exclusive relief granted on account of such delays. No additional compensation will be paid for these time extensions.

7.21.5 Delays Beyond Contractor's Control
§3-125-18(4) - For delays affecting the critical path caused by acts of God, or the public enemy, fire, unusually severe weather, earthquakes, floods, epidemics, quarantine restrictions, labor disputes, freight embargoes and other reasons beyond the Contractor's control, the Contractor may be granted an extension of time provided that:

7.21.5.1 The Contractor notifies the Engineer in writing within five (5) work days after the occurrence of the circumstances described above and states the possible effects on the completion date of the contract.

7.21.5.2 No time extension will be granted for weather conditions other than unusually severe weather occurrences, and floods.

7.21.5.3 The Contractor, if requested, submits to the Engineer within ten (10) work days after the request, a written statement describing the delay to the project. The extent of delay must be substantiated as follows:

(a) State specifically the reason or reasons for the delay and fully explain in a detailed chronology the effect of this delay to the work and/or the completion date.

(b) Submit copies of purchase order, delivery tag, and any other pertinent documentation to support the time extension request.

(c) Cite the period of delay and the time extension requested.

(d) A statement either that the above circumstances have been cleared and normal working conditions restored as of a certain day or that the above circumstances will continue to prevent completion of the project.

7.21.5.4 Time extensions shall be the exclusive relief granted and no additional compensation will be paid the Contractor for such delays.

7.21.6 Delays in Delivery of Materials - For delays in delivery of materials and / or equipment which occur as a result of unforeseeable causes beyond the control and without fault or

negligence of both the Contractor, its subcontractor(s) or supplier(s), the Contractor may be granted an extension of time provided that it complies with the following procedures.

7.21.6.1 The Contractor must notify the Engineer in writing within five (5) consecutive working days after it first has any knowledge of delays or anticipated delays and state the effects such delays may have on the completion date of the contract.

7.21.6.2 The Contractor, if requested, must submit to the Engineer within ten (10) working days after a firm delivery date for the material and equipment is established, a written statement as to the delay to the progress of the project. The delay must be substantiated as follows:

(a) State specifically the reason or reasons for the delay. Explain in a detailed chronology the effect of this delay to the other work and / or the completion date.

(b) Submit copies of purchase order(s), factory invoice(s), bill(s) of lading, shipping manifest(s), delivery tag(s) and any other pertinent correspondence to support the time extension request.

(c) Cite the start and end date of the delay and the days requested therefore. The delay shall not exceed the difference between the originally scheduled delivery date versus the actual delivery date.

7.21.6.3 Time extensions shall be the exclusive relief granted and no additional compensation will be paid the Contractor on account of such delay.

7.21.7 Delays For Suspension of Work - Delay during periods of suspension of the work by the Engineer shall be computed as follows:

7.21.7.1 When the performance of the work is totally suspended for one or more days (calendar or working days, as appropriate) by order of the Engineer in accordance with paragraphs 7.24.1.1, 7.24.1.2, 7.24.1.4 or 7.24.1.6 the number of days from the effective date of the Engineer's order to suspend operations to the effective date of the Engineer's order to resume operations shall not be counted as contract time and the contract completion date will be adjusted. Should the Contractor claim for additional days in excess of the suspension period, Contractor shall provide evidence justifying the additional time. During periods of partial suspensions of the work, the Contractor will be granted a time extension only if the partial suspension affects the critical path. If the Contractor believes that an extension of time is justified for a partial suspension of work, it must request the extension in writing at least five (5) working days before the partial suspension will affect the critical operation(s) in progress. The Contractor must show how the critical path was increased based on the status of the work and must also support its claim, if requested, with statements from its subcontractors. A suspension of work will not constitute a waiver of pre-existing Contractor delay.

7.21.8 Contractor Caused Delays - No time extension will be considered for the following:

7.21.8.1 Delays in performing the work caused by the Contractor, subcontractor and / or supplier.

7.21.8.2 Delays in arrival of materials and equipment caused by the Contractor, subcontractor and / or supplier in ordering, fabricating, delivery, etc.

7.21.8.3 Delays requested for changes which the Engineer determines unjustifiable due to the lack of supporting evidence or because the change is not on the critical path.

7.21.8.4 Delays caused by the failure of the Contractor to submit for review and acceptance by the Engineer, on a timely basis, shop drawings, descriptive sheets, material samples, color samples, etc. except as covered in subsection 7.21.5 and 7.21.6.

7.21.8.5 Failure to follow the procedure within the time allowed to qualify for a time extension.

7.21.8.6 Days the Contractor is unable to work due to normal rainfall or other normal bad weather day conditions.

7.21.9 Reduction in Time - If the Department deletes any portion of the work, an appropriate reduction of contract time may be made in accordance with Section 4.2 CHANGES.

7.22 CONSTRUCTION SCHEDULE

7.22.1 The Contractor shall submit its detailed construction schedule to the Engineer prior to the start of the work. The purpose of the schedule is to allow the Engineer to monitor the Contractor's progress on the work. The schedule shall account for normal inclement weather, unusual soil or other conditions that may influence the progress of the work, schedules and coordination required by any utility, off or on site fabrications, and all other pertinent factors that relate to progress.

7.22.2 Submittal of and the Engineer's receipt of the construction schedule shall not imply the Department's approval of the schedule's breakdown, its individual elements, and any critical path that may be shown. Any acceptance or approval of the schedule 1) shall be for general format only and not for sequences or durations thereon, and 2) shall not be deemed an agreement by the Department that the construction means, methods and resources shown on the schedule will result in work that conforms to the contract requirements. The Contractor has the risk of all elements (whether or not shown) of the schedule and its execution. Additional compensation shall not be due the Contractor in the event that deviations from the Contractor's schedule, caused by any design revisions required to resolve site conditions or State, County, or utility requirements, affect the efficiency of its operations.

7.22.3 In the event the Contractor submits and the Department receives an accelerated schedule (shorter than the contract time), such will not constitute an agreement to modify the contract time or completion date, nor will the receipt, acceptance or approval of such a schedule incur any obligation by the Department.

7.22.4 Caution - The Department will not be responsible if the Contractor does not meet its accelerated schedule.

7.22.5 The requirements of this Section 7.22 CONSTRUCTION SCHEDULE may be waived by the Engineer.

7.23 STATEMENT OF WORKING DAYS - For all contracts on a working day basis, the Contractor will submit a statement of the number of working days for each month together with the Monthly Payment Application. The Monthly Payment Application will not be processed without the statement of working days.

7.24 SUSPENSION OF WORK §3-125-7 HAR

7.24.1 Procedure to be followed - The Engineer may, by written order, suspend the performance of the Work up to thirty (30) days and the Comptroller, for an unlimited number of days, either in whole or in part for any cause, including but not limited to:

7.24.1.1 Weather or excess bad weather days, considered unsuitable by the Engineer for prosecution of the work; or

7.24.1.2 Soil Conditions considered unsuitable by the Engineer for prosecution of the work; or

7.24.1.3 Failure of the Contractor to:

(a) Correct conditions unsafe for the general public or for the workers;

(b) Carry out orders given by the Engineer;

(c) Perform the work in strict compliance with the provisions of the contract; or

(d) Provide a qualified Superintendent on the jobsite as described under Section 5.8 COOPERATION BETWEEN THE CONTRACTOR AND THE DEPARTMENT.

7.24.1.4 When any redesign is deemed necessary by the Engineer; or

7.24.1.5 Disturbance due to noise, odors or dust arising from the construction even if such disturbance does not violate the section on Environmental Protection contained in the specifications; or

7.24.1.6 The convenience of the State.

7.24.2 Partial, Total Suspension of Work - Suspension of work on some but not all items of work shall be considered a partial suspension. Suspension of work on the entire work at the job site shall be considered total suspension. The period of suspension shall be computed as set forth in subsection 7.21.7 -Delays for Suspension of Work.

7.24.3 Payment §3-125-7 HAR

7.24.3.1 In the event that the Contractor is ordered by the Engineer in writing as provided herein to suspend all work under the contract in accordance with paragraphs 7.24.1.4 or 7.24.1.6, the Contractor may be reimbursed for actual direct costs incurred on work at the jobsite, as authorized in writing by the Engineer, including costs expended for the protection of the work. Payment for equipment which must standby during such suspension of work shall be made as described in clause 8.3.4.5.(e). No payment will be made for profit on any suspension costs. An allowance of five percent (5%) will be paid on any reimbursed actual costs for indirect categories of delay costs, including extended branch and home-office overhead and delay impact costs.

7.24.3.2 However, no adjustment to the contract amount or time shall be made under this Section 7.24 for any suspension, delay, or interruption:

(a) To the extent that performance would have been so suspended, delayed, or interrupted by any other cause, including the fault or negligence of the Contractor; or

(b) For which an adjustment is provided for or excluded under any other provision of this Contract.

7.24.3.3 Any adjustment in contract price made pursuant to this subsection shall be determined in accordance with this Section 7.24 and Section 4.2 CHANGES.

7.24.3.4 Claims for such compensation shall be filed with the Engineer within ten (10) calendar days after the date of the order to resume work or such claims will be waived by the Contractor. Together with the claim, the Contractor shall submit substantiating documents supporting the entire amount shown on the claim. The Engineer may make such investigations as are deemed necessary and shall be the sole judge of the claim and the Engineer's decision shall be final.

7.24.4 Claims Not Allowed - No claim under this Section 7.24 shall be allowed:

7.24.4.1 For any direct costs incurred more than twenty (20) days before the Contractor shall have notified the Engineer in writing of any suspension that the Contractor considered compensable. This requirement shall not apply as to a claim resulting from a suspension order under paragraphs 7.24.1.4 or 7.24.1.6, and

7.24.4.2 Unless the claim is asserted in writing within ten (10) calendar days after the termination of such suspension, delay, or interruption, but in no case not later than the date of final payment under the contract.

7.24.4.3 No provision of this Section 7.24 shall be construed as entitling the Contractor to compensation for delays due to failure of surety, for suspensions made at the request of the Contractor, for any delay required under the Contract, for partial suspension of work or for suspensions made by the Engineer under the provisions of paragraphs 7.24.1.1, 7.24.1.2, 7.24.1.3 and 7.24.1.5.

7.25 DISPUTES AND CLAIMS §3-126-31 HAR

7.25.1 Required Notification - As a condition precedent for any claim, the Contractor must give notice in writing to the Engineer in the manner and within the time periods stated in Section 4.2 CHANGES for claims for extra compensation,

damages, or an extension of time due for one or more of the following reasons:

7.25.1.1 Requirements not clearly covered in the contract, or not ordered by the Engineer as an extra;

7.25.1.2 Failure by the State and Contractor to agree to an Oral Order or an adjustment in price or contract time for a Field Order or a Change Order issued by the State;

7.25.1.3 An action or omission by the Engineer requiring performance changes beyond the scope of the contract;

7.25.1.4 Failure of the State to issue a Field Order for controversies within the scope of Section 4.2 CHANGES.

7.25.1.5 For any other type of claim, the Contractor shall give notice within the time periods set forth in contract provisions pertaining to that event. If no specific contract provisions pertain to the claim, then the written notice of claim must be submitted within fifteen (15) days of the event giving rise to the claim.

7.25.2 Continued Performance of Work - The Contractor shall at all times continue with performance of the contract in full compliance with the directions of the Engineer. Continued performance by the Contractor shall not be deemed a waiver of any claim for additional compensation, damages, or an extension of time for completion, provided that the written notice of claim is submitted in accordance with subsection 7.25.1

7.25.3 The requirement for timely written notice shall be a condition precedent to the assertion of a claim.

7.25.4 Requirements for Notice of Claim -The notice of claim shall clearly state the Contractor's intention to make claim and the reasons why the Contractor believes that additional compensation, changes or an extension of time may be remedies to which it is entitled. At a minimum, it shall provide the following:

7.25.4.1 Date of the protested order, decision or action;

7.25.4.2 The nature and circumstances which caused the claim;

7.25.4.3 The contract provision that support the claim;

7.25.4.4 The estimated dollar cost, if any, of the protested work and how that estimate was determined; and

7.25.4.5 An analysis of the progress schedule showing the schedule change or disruption if the Contractor is asserting a schedule change or disruption.

7.25.5 If the protest or claim is continuing, the information required in subsection 7.25.4 above shall be supplemented as requested by the Engineer.

7.25.6 Final Statement for Claim - The Contractor shall provide a final written statement of the actual adjustment in contract price and/or contract time requested for each notice of claim. Such statement shall clearly set forth that it is the final statement for that notice of claim. All such final statements shall be submitted within thirty (30) days after completion of the work that is the subject of the claim, but in no event no later than thirty (30) days after the Project Acceptance Date or the date of termination of the Contractor, whichever comes first.

7.25.7 All claims of any nature are barred if asserted after final payment under this contract has been made, except as provided under Section 8.9 CLAIMS ARISING OUT OF PAYMENT FOR REQUIRED WORK.

7.25.8 Contractor may protest the assessment or determination by the Engineer of amounts due the State from the Contractor by providing a written notice to the Engineer within thirty (30) days of the date of the Engineer's written assessment or determination. Said notice shall comply with all requirements of subsections 7.25.4 and 7.25.6 above. The requirement of such notice cannot be waived and it is a condition precedent to any claim by the Contractor. Failure to comply with these notice provisions constitutes a waiver of any claim.

7.25.9 In addition to the requirements of subsections 7.25.4, 7.25.6, and 7.25.8, all final written statements of claim shall be certified. This certification requirement applies to the Contractor without exception, including, but not limited to, situations involving "pass through" claims of subcontractors or suppliers. The certification must be executed by a person duly authorized to bind the Contractor with respect to the claim. The certification shall state as follows:

7.25.9.1 "I certify that the claim is made in good faith; that the supporting data are accurate and complete to the best of my knowledge and belief; that the amount requested accurately reflects the contract adjustment for which the Contractor believes the State is liable; and that I am duly authorized to certify the claim on behalf of the Contractor."

7.25.10 Decision on Claim / Appeal - The decision of the Engineer on the claim shall be final and conclusive, unless fraudulent, or unless the Contractor delivers to the Comptroller a written appeal of the Engineer's decision. Said appeal shall be delivered to the Comptroller no later than thirty (30) days after the date of the Engineer's decision.

7.25.10.1 In that event, the decision of the Comptroller shall be final and conclusive, unless fraudulent or unless the Contractor brings an action seeking judicial review of the Comptroller's decision in an appropriate circuit court of this State within six (6) months from the date of the Comptroller's decision.

7.25.11 Payment and Interest - The amount determined payable pursuant to the decision, less any portion already paid, normally should be paid without awaiting Contractor action concerning appeal. Such payments shall be without prejudice to the rights of either party. Interest on amounts ultimately determined to be due to a Contractor shall be payable at the Statutory rate applicable to judgments against the State under Chapter 662, HRS from the date of receipt of a properly certified final written statement of actual adjustment required until the date of decision; except, however, that if an action is initiated in circuit court, interest under this Section 7.25 shall only be calculated until the time such action is initiated. Interest on amounts due the State from the Contractor shall be payable at the same rate from the date of issuance of the Engineer's

notice to the Contractor. Where such payments are required to be returned by a subsequent decision, interest on such payments shall be paid at the statutory rate from the date of payment.

7.25.12 Contractor shall comply with any decision of the Engineer and proceed diligently with performance of this contract pending final resolution by a circuit court of this State of any controversy arising under, or by virtue of, this contract, except where there has been a material breach of contract by the State; provided that in any event the Contractor shall proceed diligently with the performance of the contract where the Engineer has made a written determination that continuation of work under the contract is essential to the public health and safety.

7.25.13 Waiver of Attorney's Fees - In the event of any litigation arising under, or by virtue of, this contract, the Contractor and the State agree to waive all claims against each other for attorney's fees and agree to refrain from seeking attorney's fees as part of any award or relief from any court.

7.26 FAILURE TO COMPLETE THE WORK ON TIME

7.26.1 Completion of the work within the required time is important because delay in the prosecution of the work will inconvenience the public and interfere with the State's business. In addition, the State will be damaged by the inability to obtain full use of the completed work and by increased engineering, inspection, superintendence, and administrative services in connection with the work. Furthermore, delay may detrimentally impact the financing, planning, or completion of other State projects because of the need to devote State resources to the project after the required completion date. The monetary amount of such public inconvenience, interference with State business, and damages, is difficult, if not impossible, to accurately determine and precisely prove. Therefore, it is hereby agreed that the amount of such damages shall be the appropriate sum of liquidated damages as set forth below.

7.26.1.1 When the Contractor fails to complete the Work or any portion of the Work within the time or times fixed in the contract or any extension thereof, it is agreed the Contractor shall pay liquidated damages to the Department based upon the amount stated in the Specification Section 00800 SPECIAL CONDITIONS.

7.26.1.2 If the Contractor fails to correct Punchlist deficiencies as required by Section 7.32 PROJECT ACCEPTANCE DATE, the State will be inconvenienced and damaged, therefore, it is agreed that the Contractor shall pay liquidated damages to the Department based upon the amount stated in the Specification Section 00800 SPECIAL CONDITIONS. Liquidated damages shall accrue for all days after the Contract Completion Date or any extension thereof, until the date the Punchlist items are corrected and accepted by the Engineer.

7.26.1.3 If the Contractor fails to submit final documents as required by Section 7.33 FINAL SETTLEMENT OF THE CONTRACT, the State will be inconvenienced and damaged, therefore, it is agreed that the Contractor shall pay liquidated damages to the Department based upon the amount stated in the Specification Section 00800 SPECIAL CONDITIONS. Liquidated damages shall accrue for all days after the Contract Completion Date or any extension thereof, until the date the final documents are received by the Engineer.

7.26.1.4 The Engineer shall assess the total amount of liquidated damages in accordance with the amount stated in the Specification Section 00800 SPECIAL CONDITIONS and provide written notice of such assessment to the Contractor.

7.26.2 Acceptance of Liquidated Damages -The assessment of liquidated damages by the Engineer shall be accepted by the parties hereto as final, unless the Contractor delivers a written appeal of the Engineer's decision in accordance with subsection 7.25.10 requirements. Any allowance of time or remission of charges or liquidated damages shall in no other manner affect the rights or obligations of the parties under this contract nor be construed to prevent action under Section 7.27 TERMINATION OF CONTRACT FOR CAUSE. If the Department terminates the Contractor's right to proceed, the resulting damage will include such liquidated damages for such time as may be required for final completion of the work after the required contract completion date.

7.26.3 Payments for Liquidated Damages -Liquidated damages shall be deducted from monies due or that may become due to the Contractor under the contract or from other monies that may be due or become due to the Contractor from the State.

7.27 TERMINATION OF CONTRACT FOR CAUSE §3-125-18 HAR

7.27.1 Default - If the Contractor refuses or fails to perform the work, or any separable part thereof, with such diligence as will assure its completion within the time specified in this contract, or any extension thereof, fails to complete the work within such time, or commits any other material breach of this contract, and further fails within seven (7) days after receipt of written notice from the Engineer to commence and continue correction of the refusal or failure with diligence and promptness, the Comptroller may, by written notice to the Contractor, declare the Contractor in breach and terminate the Contractor's right to proceed with the work or the part of the work as to which there has been delay or other breach of contract. In such event, the Department may take over the work and perform the same to completion, by contract or otherwise, and may take possession of, and utilize in completing the work, the materials, appliances, and plant as may be on the site of the work and necessary therefor. Whether or not the Contractor's right to proceed with the work is terminated, the Contractor and the Contractor's sureties shall be liable for any damage to the Department resulting from the Contractor's refusal or failure to complete the work within the specified time.

7.27.2 Additional Rights and Remedies - The rights and remedies of the Department provided in this contract are in addition to any other rights and remedies provided by law.

7.27.3 Costs and Charges

7.27.3.1 All costs and charges incurred by the Department, together with the cost of completing the work under contract, will be deducted from any monies due or which would or might have become due to the Contractor had it been allowed to complete the work under the contract. If such expense exceeds the sum which would have been payable under the

contract, then the Contractor and the surety shall be liable and shall pay the Department the amount of the excess.

7.27.3.2 In case of termination, the Comptroller shall limit any payment to the Contractor to the part of the contract satisfactorily completed at the time of termination. Payment will not be made until the work has satisfactorily been completed and the tax clearance required by Section 8.8 FINAL PAYMENT is submitted by the Contractor. Termination shall not relieve the Contractor or Surety from liability for liquidated damages.

7.27.4 Erroneous Termination for Cause - If, after notice of termination of the Contractor's right to proceed under this Section 7.27, it is determined for any reason that good cause did not exist to allow the Department to terminate as provided herein, the rights and obligations of the parties shall be the same as, and the relief afforded the Contractor shall be limited to, the provisions contained in Section 7.28 TERMINATION FOR CONVENIENCE.

7.28 TERMINATION FOR CONVENIENCE
§3-125-22 HAR

7.28.1 Termination - The Comptroller may, when the interests of the State so require, terminate this contract in whole or in part, for the convenience of the State. The Comptroller shall give written notice of the termination to the Contractor specifying the part of the contract terminated and when termination becomes effective.

7.28.2 Contractor's Obligations - The Contractor shall incur no further obligations in connection with the terminated work and on the date set in the notice of termination the Contractor will stop work to the extent specified. The Contractor shall also terminate outstanding orders and subcontracts as they relate to the terminated work. The Contractor shall settle the liabilities and claims arising out of the termination of subcontracts and orders connected with the terminated work subject to the State's approval. The Comptroller may direct the Contractor to assign the Contractor's right, title, and interest under terminated orders or subcontracts to the State. The Contractor must still complete the work not terminated by the notice of termination.

7.28.3 Right to Construction and Goods - The Comptroller may require the Contractor to transfer title and delivery to the State in the manner and to the extent directed by the Comptroller, the following:

7.28.3.1 Any completed work; and

7.28.3.2 Any partially completed construction, goods, materials, parts, tools, dies, jigs, fixtures, drawings, information, and contract rights (hereinafter called "construction material") that the Contractor has specifically produced or specially acquired for the performance of the terminated part of this contract.

7.28.3.3 The Contractor shall protect and preserve all property in the possession of the Contractor in which the State has an interest. If the Comptroller does not elect to retain any such property, the Contractor shall use its best efforts to sell such property and construction material for the Department's account in accordance with the standards of section 490:2-706, HRS.

7.28.4 Compensation

7.28.4.1 Contractor shall submit a termination claim specifying the amounts due because of the termination for convenience together with cost or pricing data, submitted to the extent required by subchapter 15, chapter 3-122, HAR. If the Contractor fails to file a termination claim within one year from the effective date of termination, the Comptroller may pay the Contractor, if at all, an amount set in accordance with paragraph 7.28.4.3.

7.28.4.2 The Comptroller and the Contractor may agree to a settlement provided the Contractor has filed a termination claim supported by cost or pricing data submitted as required and that the settlement does not exceed the total contract price plus settlement costs reduced by payments previously made by the State, the proceeds of any sales of construction, supplies, and construction materials under paragraph 7.28.3.3 of this Section, and the contract price of the work not terminated.

7.28.4.3 Absent complete agreement, the Comptroller shall pay the Contractor the following amounts, less any payments previously made under the contract.

(a) The cost of all contract work performed prior to the effective date of the notice of termination work plus a five percent (5%) markup on the actual direct costs, including amounts paid to subcontractor, less amounts previously paid or to be paid for completed portions of such work; provided, however, that if it appears that the Contractor would have sustained a loss if the entire contract would have been completed, no markup shall be allowed or included and the amount of compensation shall be reduced to reflect the anticipated rate of loss. No anticipated profit or consequential damage will be due or paid.

(b) Subcontractors shall be paid a markup of ten percent (10%) on their direct job costs incurred to the date of termination. No anticipated profit or consequential damage will be due or paid to any subcontractor. These costs must not include payments made to the Contractor for subcontract work during the contract period.

(c) In any case, the total sum to be paid the Contractor shall not exceed the total contract price reduced by the amount of any sales of construction supplies, and construction materials.

7.28.4.4 Costs claimed, agreed to, or established by the State shall be in accordance with chapter 3-123, HAR.

7.29 CORRECTING DEFECTS - If the Contractor fails to commence to correct any defects of any nature, within ten (10) working days after the correction thereof has been requested in writing by the State, and thereafter to expeditiously complete the correction of said defects, the Engineer may without further notice to the Contractor or surety and without termination of contract, correct the defects and deduct the cost thereof from the contract price.

7.30 FINAL CLEANING - Before final inspection of the work, the Contractor shall clean all ground occupied by the Contractor in connection with the Work of all rubbish, excess materials, temporary structures and equipment, and all parts of the work must be left in a neat and presentable condition to the satisfaction of the Engineer. However, the Contractor shall not remove any warning and directional signs prior to the formal acceptance by the Engineer. Full compensation for final cleaning will be included in the prices paid for the various items of work or lump sum bid, as the case may be, and no separate payment will be made therefor.

7.31 SUBSTANTIAL COMPLETION, AND FINAL INSPECTION - Before the Department accepts the project as being completed, unless otherwise stipulated by the Engineer, the following procedure shall be followed:

7.31.1 Substantial Completion:

7.31.1.1 The Contractor and its subcontractors shall inspect the project to confirm whether the Project is Substantially Complete. This inspection effort shall include the testing of all equipment and providing a Punchlist that identifies deficiencies which must be corrected. Contractor shall make the corrections and if required repeat the procedure. Also, the Contractor shall schedule final Building, Plumbing, Electrical, Elevator, Fire and other required inspections and obtain final approvals.

(a) When in compliance with the above requirements, the Contractor shall notify the Engineer in writing that project is Substantially Complete and ready for a Final Inspection. Along with the Substantial Completion notification, the Contractor shall provide its Punchlist(s) with the status of the deficiencies and dates when the deficiencies were corrected. The Project Inspector and / or the Engineer shall make a preliminary determination whether project is Substantially Complete.

(b) If the Project is not Substantially Complete, the Engineer shall inform the Contractor. The Contractor shall identify deficiencies which must be corrected, update its Punchlist, make the necessary corrections and repeat the previous step. After completing the necessary work, the Contractor shall notify the Engineer in writing that Punchlist deficiencies have been corrected and the project is ready for a Final Inspection.

(c) If the Project is Substantially Complete, the Engineer shall schedule a Final Inspection within fifteen (15) days of the Contractor's notification letter or as otherwise determined by the Engineer.

7.31.1.2 In addition, and to facilitate closing of the project, the Contractor shall also proceed to obtain the following closing documents (where applicable) prior to the Final Inspection:

(a) Field-Posted As-Built Drawings.

(b) Maintenance Service Contract and two (2) copies of a list of all equipment.

(c) Operating and maintenance manuals.

(d) Air conditioning test and balance reports.

(e) Any other final submittal required by the technical sections of the contract.

7.31.2 Final Inspection If at the Final Inspection the Engineer determines that all work is completed, the Engineer shall notify the Contractor in accordance with Section 7.32 PROJECT ACCEPTANCE DATE. Should there be remaining deficiencies which must be corrected, the Contractor shall provide an updated Punchlist to the Engineer, within five (5) days from the Final Inspection Date. The Contractor shall make the necessary corrections.

7.31.2.1 The Engineer shall confirm the list of deficiencies noted by the Contractor's punchlist(s) and will notify the Contractor of any other deficiencies that must be corrected before final settlement.

7.31.3 The Engineer may add to or otherwise modify the Punchlist from time to time. The Contractor shall take immediate action to correct the deficiencies.

7.31.4 Revoking Substantial Completion - At any time before final Project Acceptance is issued, the Engineer may revoke the determination of Substantial Completion if the Engineer finds it was not warranted. The Engineer shall notify the Contractor in writing with the reasons and outstanding deficiencies negating the declaration. Once notified, the Contractor shall make the necessary corrections and repeat the required steps noted in subsections 7.31.1 and 7.31.2.

7.32 PROJECT ACCEPTANCE DATE

7.32.1 If upon Final Inspection, the Engineer finds that the project has been satisfactorily completed in compliance with the contract, the Engineer shall declare the project completed and accepted and will notify the Contractor in writing of the acceptance by way of the Project Acceptance Notice.

7.32.2 Protection and Maintenance - After the Project Acceptance Date, the Contractor shall be relieved of maintaining and protecting the work EXCEPT that this does not hold true for those portions of the work which have not been accepted, including Punchlist deficiencies. The State shall be responsible for the protection and maintenance of the accepted facility.

7.32.3 The date of Project Acceptance shall determine:

7.32.3.1 End of Contract Time.

7.32.3.2 Commencement of all guaranty periods except as noted in Section 7.34 CONTRACTOR'S RESPONSIBILITY FOR WORK: RISK OF LOSS.

7.32.3.3 Commencement of all maintenance services except as noted in Section 7.34 CONTRACTOR'S RESPONSIBILITY FOR WORK: RISK OF LOSS.

7.32.4 Punchlist Requirements - If a Punchlist is required under Section 7.31 SUBSTANTIAL COMPLETION AND FINAL INSPECTION, the Project Acceptance Notice will

include the Engineer's Punchlist and the date when correction of the deficiencies must be completed.

7.32.5 Upon receiving the Punchlist, the Contractor shall promptly devote the required time, labor, equipment, materials and incidentals necessary to correct the deficiencies expeditiously.

7.32.6 For those items of work that cannot be completed by the established date, the Contractor shall submit a schedule in writing to the Engineer for approval along with documentation to justify the time required, no later than five (5) working days before the date stipulated for completion of the Punchlist work. A Proposed schedule submitted after the five (5) day period will not be considered.

7.32.7 **Failure to Correct Deficiencies** - After the Contract Completion Date, or any extension thereof, if the Contractor fails to correct the deficiencies within the established date or agreed to Punchlist completion date, the Engineer shall assess liquidated damages as required by Section 7.26 - FAILURE TO COMPLETE THE WORK ON TIME.

7.32.8 If the Contractor fails to correct the deficiencies and complete the work by the established or agreed to date, the State also reserves the right to correct the deficiencies by whatever method it deems necessary and deduct the cost from the final payment due the contractor.

7.32.9 The Contractor may further be prohibited from bidding in accordance with Section 2.12 - DISQUALIFICATION OF BIDDERS. In addition, assessment of damages shall not prevent action under Section 7.27 - TERMINATION OF CONTRACT FOR CAUSE.

7.33 FINAL SETTLEMENT OF CONTRACT - The contract will be considered settled after the project acceptance date and when the following items have been satisfactorily submitted, where applicable:

7.33.1 **Necessary Submissions** in addition to the items noted under paragraph 7.31.1.2.

7.33.1.1 All written guarantees required by the contract.

7.33.1.2 Complete and certified weekly payrolls for the Contractor and its Subcontractor(s).

7.33.1.3 Certificate of Plumbing and Electrical Inspection.

7.33.1.4 Certificate of Building Occupancy.

7.33.1.5 Certificates for Soil Treatment and Wood Treatment.

7.33.1.6 Certificate of Water System Chlorination.

7.33.1.7 Certificate of Elevator Inspection, Boiler and Pressure Pipe installation.

7.33.1.8 All other documents required by the Contract.

7.33.2 **Failure to Submit Closing Documents** - The Contractor shall submit the final Payment Application and the above applicable closing documents within sixty (60) days from the date of Project Acceptance or the agreed to Punchlist completion date. Should the Contractor fail to comply with these requirements, the Comptroller may terminate the Contract for cause. The pertinent provisions of Section 7.27 TERMINATION OF CONTRACT FOR CAUSE shall be applicable.

7.33.3 In addition, should the Contractor fail to furnish final closing documents within the required time period, the Engineer shall assess liquidated damages as required by Section 7.26 FAILURE TO COMPLETE THE WORK ON TIME.

7.34 CONTRACTOR'S RESPONSIBILITY FOR WORK; RISK OF LOSS

7.34.1 Until the establishment of the Project Acceptance Date or Beneficial Occupancy whichever is sooner, the Contractor shall take every necessary precaution against injury or damage to any part of the work caused by the perils insured by an All Risk policy excluding earthquakes and floods, whether arising from the execution or from the non-execution of the work. The Contractor shall rebuild, repair, restore and make good all injuries or damage to any portion of the work occasioned by the perils insured by an All Risk policy before the date of final acceptance and shall bear the risk and expense thereof.

7.34.2 After the Project Acceptance Date or Beneficial Occupancy whichever is sooner, the Contractor shall be relieved of maintaining and protecting the work except for those portions of the work which have not been accepted including Punchlist deficiencies.

7.34.3 The risk of damage to the work from any hazard or occurrence that may be covered by a required Property Insurance policy is that of the Contractor, unless such risk of loss is placed elsewhere by express language in the contract documents. No claims for any loss or damage shall be recognized by the Department, nor will any such loss or damage excuse the complete and satisfactory performance of the contract by the Contractor.

7.35 GUARANTEE OF WORK

7.35.1 In addition to any required manufacturers warranties, all work and equipment shall be guaranteed by the Contractor against defects in materials, equipment or workmanship for one year from the Project Acceptance Date or as otherwise specified in the Contract Documents, whichever is earlier.

7.35.2 **Repair of Work** - If, within any guarantee period, repairs or changes are required in connection with the guaranteed work, which in the opinion of the Engineer is necessary due to materials, equipment or workmanship which are inferior, defective or not in accordance with the terms of the Contract, the Contractor shall within five (5) working days and without expense to the Department commence to:

7.35.2.1 Place in satisfactory condition in every instance all such guaranteed work and correct all defects therein; and

7.35.2.2 Make good and repair or replace to new or pre-existing condition all damages to the building, facility, work or equipment or contents thereof, resulting from such defective materials, equipment or installation thereof.

7.35.3 Manufacturer's and Installer's Guarantee- Whenever a manufacturer's or installer's guarantee on any product specified in the respective Specification sections, exceeds one year, this guarantee shall become part of this contract in addition to the Contractor's guarantee. Contractor shall complete the guarantee forms in the name of the Department and submit such forms to the manufacturer within such time required to validate the guarantee. Contractor shall submit to the Department a photocopy of the completed guarantee form for the Department's record as evidence that such guarantee form was executed by the manufacturer.

7.35.4 If a defect is discovered during a guarantee period, all repairs and corrections to the defective items when corrected shall again be guaranteed for the original full guarantee period. The guarantee period shall be tolled and suspended for all work affected by the defect. The guarantee period for work affected by the defect shall restart for its remaining duration upon confirmation by the Engineer that the deficiencies have been repaired or remedied.

7.35.5 If guarantee is specified for greater than two (2) years, two (2) years shall prevail except for manufacturer's warranties. Manufacturer's warranties shall remain as specified in their respective Specification sections.

7.35.5.1 However, the number of years specified in the technical specifications shall prevail only if it is stated that the number of years for guarantee supercedes this provision.

7.36 WORK OF AND CHARGES BY UTILITIES

7.36.1 The Contractor shall be responsible for scheduling and coordinating the work with the utility companies and applicable Governmental agencies for permanent service installation and connections or modifications to existing utilities. The Contractor shall make available all portions of the work necessary for the utility companies to do their work. The Department shall not bear the risk of any damage to the contract work caused by any utility company, and work of repairing such damage and delay costs must be resolved between the Contractor and the utility company and their insurers.

7.36.2 Unless stated as an allowance item to be paid by the Contractor, the Department will pay the utility companies and applicable governmental agencies directly for necessary modifications and connections. Contractor charges for overhead, supervision, coordination, profit, insurance and any other incidental expenses shall be included in the Contractor's Bid whether the utility is paid directly by the Department or by an allowance item in the Contract.

7.37 RIGHT TO AUDIT RECORDS

7.37.1 Pursuant to Section 103D-317 HRS the State, at reasonable times and places, may audit the books and records of a Contractor, prospective contractor, subcontractor and prospective subcontractor relating to the Contractor's or subcontractor's cost or pricing data. The books and records shall be maintained by the Contractor and subcontractor(s) for a period of four (4) years from the date of final payment under the contract.

7.37.2 The Contractor shall insure that its subcontractors comply with this requirement and shall bear all costs (including attorney's fees) of enforcement in the event of its subcontractor's failure or refusal to fully cooperate.

7.37.3 Additionally, Sections 231-7, 235-108, 237-39 and other HRS chapters through reference, authorizes the Department of Taxation to audit all taxpayers conducting business within the State. Contractors must make available to the Department of Taxation all books and records necessary to verify compliance with the tax laws.

7.38 RECORDS MAINTENANCE, RETENTION AND ACCESS

7.38.1 The Contractor and any subcontractor whose contract for services is valued at $25,000 or more shall, in accordance with generally acceptable accounting practices, maintain fiscal records and supporting documents and related files, papers, and reports that adequately reflect all direct and indirect expenditures and management and fiscal practices related to the Contractor and subcontractor's performance of services under this Agreement.

7.38.2 The representative of the Department, the Comptroller of the State of Hawaii, the Attorney General, (the Federal granting agency, the Comptroller General of the United States, and any of their authorized representatives when federal funds are utilized), and the Legislative Auditor of the State of Hawaii shall have the right of access to any book, document, paper, file, or other record of the Contractor and any subcontractor that is related to the performance of services under this Agreement in order to conduct an audit or other examination and / or to make copies, excerpts and transcripts for the purposes of monitoring and evaluating the Contractor and subcontractor's performance of services and the Contractor and subcontractor's program, management, and fiscal practices to assure the proper and effective expenditure of funds and to verify all costs associated with any claims made under this Agreement.

7.38.3 The right of access shall not be limited to the required retention period but shall last as long as the records are retained. The Contractor and subcontractor shall retain all records related to the Contractor and subcontractor's performance of services under this Agreement for four (4) years from the date of final payment, except that if any litigation, claim, negotiation, investigation, audit or other action involving the records has been started before the expiration of the four (4) year period, the Contractor and subcontractors shall retain the records until completion of the action and resolution of all issues that arise from it, or until the end of the four (4)) year retention period, whichever occurs later. Furthermore, it shall be the Contractor's responsibility to enforce compliance with this provision by any subcontractor. . . . . .

ARTICLE 8 - Measurement and Payment

8.1 MEASUREMENT OF QUANTITIES

8.1.1 All work completed under the Contract shall be measured by the Engineer according to United States standard

measures, or as stated in this Contract. The method of measurement and computations to be used in determination of quantities of material furnished and of work performed under the contract shall conform to good engineering practice. These measurements shall be considered correct and final unless the Contractor has protested same to the Engineer and has demonstrated the existence of an error by actual physical measurement before the work has progressed in a manner which would prohibit a proper check.

8.1.2 All measurements of the area of the various surface, pavement and base courses will be made in the horizontal projection of the actual surface and no deductions will be made for fixtures or structures having an area of nine (9) square feet or less. All measurements of headers, curbs, fences and any other type of construction which is to be paid for by its length, will be made in the horizontal projection of the actual driven length from toe to top of cutoff, except where slope exceeds ten percent (10%) and for piles, which will be by actual length. All materials which are specified for measurement by the cubic yard "Loose Measurement" or "Measured in the Vehicle" shall be hauled in approved vehicles and measured therein at the point of delivery. Approved vehicles for this purpose may be of any type or size satisfactory to the Engineer, provided that the body is of such type that the actual contents may be readily and accurately determined. Unless all approved vehicles on a job are of a uniform capacity each approved vehicle must bear a plainly legible identification mark indicating the specific approved capacity. The Inspector may reject all loads not hauled in such approved vehicles.

8.2 NO WAIVER OF LEGAL RIGHTS - The Engineer shall not be precluded or estopped by any measurements, estimate or certificate made either before or after the completion and acceptance of the work and payment therefor, from showing the true amount and character of the work performed and materials furnished by the Contractor, or from showing that any such measurement estimate or certificate is untrue or incorrectly made, or rejecting the work or materials that do not conform in fact to the contract. The Engineer shall not be precluded or estopped, notwithstanding any such measurement, estimate, or certificate and payment in accordance therewith, from recovering from the Contractor and its sureties such damages as the Department may sustain by reason of the Contractor's failure to comply with the terms of the contract. Neither the acceptance by the Engineer or any representative of the Engineer, nor any payment for or acceptance of the whole or any part of the work, nor any extension of time, or any possession taken by the Engineer, shall operate as a waiver of any portion of the contract, or of any power herein reserved, or any right to damage herein provided. A waiver of any notice requirement or breach of the contract shall not be held to be a waiver of any other notice requirement or subsequent breach.

8.3 PAYMENT FOR ADDITIONAL WORK

8.3.1 Additional work as defined in Section 4.2 CHANGES, when ordered, shall be paid for as defined in Section 4.4 PRICE ADJUSTMENT by a duly issued change order in accordance with the terms provided therein.

8.3.2 On credit proposals and proposals covering both increases and decreases, the application of overhead and profit shall be on the net change in direct costs for the performance of the work.

8.3.3 When payment is to be made for additional work directed by a field order, the total price adjustment as specified in the field order or if not specified therein for the work contained in the related change order shall be considered full compensation for all materials, labor, insurance, taxes, equipment use or rental and overheads, both field and home office including extended home and branch office overhead and other related delay impact costs.

8.3.4 Force Account Method - When, for the convenience of the Department, payment is to be made by the Force Account method, all work performed or labor and materials and equipment furnished shall be paid for as described below. Payment by the Force Account method will not alter any rights, duties and obligations under the contract.

8.3.4.1 Labor - For all hourly workers, the Contractor will receive the rate of wage including fringe benefits when such amounts are required by collective bargaining agreement or other employment contract generally applicable to the classes of labor employed on the work, which shall be agreed upon in writing before beginning work for each and every hour that said labor is actually engaged in said work.

(a) All markups for overhead and profit shall be added subject to limitations established in Section 4.5 ALLOWANCES FOR OVERHEAD AND PROFIT.

(b) No allowance for overtime compensation will be given without the written approval of the Engineer prior to performance of such work.

8.3.4.2 Insurance and Taxes - The Contractor and subcontractor(s) will also receive the actual additional costs paid for property damage, liability, workers compensation insurance premiums, State unemployment contributions, Federal unemployment taxes, social security and Medicare taxes to which a markup of up to six percent (6%) may be added.

8.3.4.3 Materials - For materials accepted by the Engineer and used, the Contractor and subcontractor(s) shall receive the actual cost of such materials delivered and incorporated into work, plus a markup allowed under Section 4.5 ALLOWANCES FOR OVERHEAD AND PROFIT.

8.3.4.4 Subcontractors - Subcontractor costs shall be the actual costs of the subcontractor marked up as defined in this Section 8.3 plus a markup allowed under Section 4.5 ALLOWANCES FOR OVERHEAD AND PROFIT.

8.3.4.5 Equipment

(a) For machinery or special equipment (other than small tools as herein defined in clause 8.3.4.5.(h) owned or leased by the Contractor or a related entity, the use of which has been authorized by the Engineer:

(a.1) The Contractor will be paid at the per-hour rental rates based on the monthly rate established for said machinery or equipment in the then-current edition of the Rental Rate Blue Book for Construction Equipment including the estimated

operating cost per hour and regional correction provided therein.

(a.2) If no rate is listed for a particular kind, type or size of machinery or equipment, then the monthly, hourly rates shall be as agreed upon in writing by the Contractor and the Engineer prior to the use of said machinery or equipment. If there is no agreement, the Engineer will set a rate. The Contractor may contest the rate pursuant to Section 7.25 DISPUTES AND CLAIMS.

(a.3) Rental rates which are higher than those specified in the aforesaid Rental Rate Blue Book publication may be allowed where such higher rates can be justified by job conditions such as work in water and work on lava, etc. Request for such higher rates shall be submitted in writing to the Engineer for approval prior to the use of the machinery or equipment in question.

(b) For machinery or special equipment (other than small tools as herein defined in clause 8.3.4.5.(h) rented by the Contractor or a related entity specifically for the Force Account work, the use of which has been authorized by the Engineer; The Contractor will be paid the actual rental cost for the machinery or equipment, including mobilization and demobilization costs. A receipt from the equipment supplier shall be submitted to the Engineer.

(c) For machinery or special equipment (other than small tools as herein defined in clause 8.3.4.5.(h) rented by the Contractor or a related entity for use in the project, but which will also be used for the Force Account work, the use of which has been authorized by the Engineer; The Contractor will be paid the actual rental cost for the machinery or equipment. No additional mobilization and demobilization costs will be paid. A receipt from the equipment supplier shall be submitted to the Engineer.

(d) The rental rate for trucks not owned by the Contractor shall be those as established under the Hawaii State Public Utilities Commission, which will be paid for as an equipment item pursuant to paragraph 8.3.4.5. Rental rates for Contractor-owned trucks not listed in the Rental Rate Blue Book shall be agreed upon in writing by the Contractor and Engineer prior to the use of said trucks. If there is no agreement, the Engineer shall set the rate. The Contractor may contest the rate pursuant to Section 7.25 DISPUTES AND CLAIMS.

(e) The rental period shall begin at the time equipment reaches the site of work, shall include each day that the machinery or equipment is at the site of the work and shall terminate at the end of the day on which the equipment is no longer needed. In the event the equipment must standby due to work being delayed or halted by reason of design, traffic, or other related problems uncontrollable by the Contractor, excluding Saturdays, Sundays and Legal Holidays, unless the equipment is used to perform work on such days, the rental shall be two hours per day until the equipment is no longer needed.

(e.1) The rental time to be paid will be for the time actually used. Any hours or operation in excess of 8 hours in any one day must be approved by the Engineer prior to the performance of such work.

(e.2) Rental time will not be allowed or credited for any day on which machinery or equipment is inoperative due to its breakdown. On such days, the Contractor will be paid only for the actual hours, if any, that the machinery or equipment was in operation.

(e.3) In the event the Force Account work is completed in less than 8 hours, equipment rental shall nevertheless be paid for a minimum 8 hours.

(e.4) For the purpose of determining the rental period the continuous and consecutive days shall be the normal 8-hour shift work day, Monday through Friday excluding legal holidays. Any work day to be paid less than 8 hours shall not be considered as continuous, except for equipment removed from rental for fuel and lubrication.

(e.5) No additional premium beyond the normal rates used will be paid for equipment over 8 hours per day or 40 hours per week.

(f) All rental rates for machinery and equipment shall include the cost of fuel, oil, lubricants, supplies, small tools, necessary attachments, repairs, maintenance, tire wear, depreciation, storage, and all other incidentals.

(g) All machinery and equipment shall be in good working condition and suitable for the purpose for which the machinery and equipment is to be used.

(h) Individual pieces of equipment or tools having a replacement value of five hundred dollars ($500) or less, whether or not consumed by use, shall be considered to be small tools and included in the allowed markup for overhead and profit and no separate payment will be made therefor.

(i) The total of all Force Account rental charges accrued over the duration of the contract for a specific item of equipment shall not exceed the replacement cost of that equipment.

(i.1) The Contractor shall provide the cost of replacement to the Engineer prior to using the equipment. If the Engineer does not agree with the replacement cost, the Engineer shall set the replacement cost. The Contractor may contest the

replacement cost pursuant to Section 7.25 DISPUTES AND CLAIMS.

(j) Should the item of equipment be rented from an unrelated entity, the rental cost will be treated as an equipment cost under paragraph 8.3.4.5.

(k) Transportation and/or Mobilization: The following provisions shall govern in determining the compensation to be paid to the Contractor for use of equipment or machinery on the Force Account method:

(k.1) The location from which the equipment is to be moved or transported shall be approved by the Engineer.

(k.2) Where the equipment must be transported to the site of the force account work, the Department will pay the reasonable cost of mobilizing and transporting the equipment, including its loading and unloading, from its original location to the site of force account work. Upon completion of the work the Department will pay the reasonable cost of mobilizing and transporting the equipment back to its original location or to another location, whichever cost is less.

(k.3) The cost of transporting the equipment shall not exceed the rates established by the Hawaii State Public Utilities Commission. If such rates are nonexistent, then the rates will be determined by the Engineer based upon the prevailing rates charged by established haulers within the locale.

(k.4) Where the equipment is self-propelled, the Department will pay the cost of moving the equipment by its own power from its original location to the site of the force account work. Upon completion of the work the Department will pay the reasonable cost of moving of the Equipment back to its original or another location, whichever cost is less.

(k.5) At the discretion of the Engineer, when the Contractor desires to use such equipment for other than Force Account work, the costs of mobilization and transportation shall be prorated between the Force Account and non Force Account work.

(l) Pickup trucks, vans, storage trailers, unless specifically rented for the Force Account work, shall be considered incidental to the Force Account work and the costs therefor are included in the markup allowed under Section 4.5 ALLOWANCES FOR OVERHEAD AND PROFIT.

8.3.4.6 State Excise (Gross Income) Tax and Bond - A sum equal to the current percentage rate for the State excise (Gross Income) tax on the total sum determined in paragraphs 8.3.4.1, 8.3.4.2, 8.3.4.3 and 8.3.4.4 above, and the bond premium shall be added as compensation to the Contractor. The actual bond premium not to exceed one percent (1%) shall be added to items covered by paragraphs 8.3.4.1, 8.3.4.2, 8.3.4.3 and 8.3.4.4 when applicable.

(a) The compensation as determined in paragraphs 8.3.4.1, 8.3.4.2, 8.3.4.3, 8.3.4.4 and 8.3.4.5 above shall be deemed to be payment in full for work paid on a force account basis.

8.3.4.7 Records - The Contractor and the Engineer shall compare records of the labor, materials and equipment rentals paid by the Force Account basis at the end of each day. These daily records, if signed by both parties, shall thereafter be the basis for the quantities to be paid for by the Force Account method. The Contractor shall not be entitled to payment for Force Account records not signed by the Engineer.

8.3.4.8 Statements - No payment will be made for work on a Force Account basis until the Contractor has submitted to the Engineer, duplicate itemized statements of the cost of such Force Account work detailed as follows:

(a) Laborers - Name, classification, date, daily hours, total hours, rate, and extension for each laborer and foreman and also the amount of fringe benefits payable if any.

(b) Equipment - Designation, dates, daily hours, total hours, rental rate, and extension for each unit of machinery and equipment.

(c) Materials

(c.1) Quantities of materials, prices and extensions

(c.2) Costs of transporting materials, if such cost is not reflected in the prices of the materials.

(c.3) Statements shall be accompanied and supported by receipted invoices for all materials used and transportation charges. However, if materials used on the Force Account work are not specifically purchased for such work but are taken from the Contractor's stock, then in lieu of the invoices the Contractors shall submit an affidavit certifying that such materials were taken from stock and that the amount claimed represents the actual cost to the Contractor.

(d) Insurance - Cost of property damage, liability and worker's compensation insurance premiums, unemployment insurance contributions, and social security tax.

8.4 PROGRESS AND / OR PARTIAL PAYMENTS

8.4.1 Progress Payments - The Contractor will be allowed progress payments on a monthly basis upon preparing the

Monthly Payment Application forms and submitting them to the Engineer. The monthly payment shall be based on the items of work satisfactorily completed and the value thereof at unit prices and/or lump sum prices set forth in the contract as determined by the Engineer and will be subject to compliance with Section 7.9 PAYROLLS AND PAYROLL RECORDS.

8.4.2 In the event the Contractor or any Subcontractor fails to submit certified copies of payrolls in accordance with the requirements of Section 7.9 PAYROLLS AND PAYROLL RECORDS, the Engineer may retain the amount due for items of work for which payroll affidavits have not been submitted on a timely basis notwithstanding satisfactory completion of the work until such records have been duly submitted. The Contractor shall not be due any interest payment for any amount thus withheld.

8.4.3 **Partial Payment for Materials** - The Contractor will also be allowed partial payments to the extent of ninety percent (90%) of the manufacturer's, supplier's, distributor's or fabricator's invoice cost of accepted materials to be incorporated in the work on the following conditions:

8.4.3.1 The materials are delivered and properly stored at the site of Work; or

8.4.3.2 For special items of materials accepted by the Engineer, the materials are delivered to the Contractor or subcontractor(s) and properly stored in an acceptable location within a reasonable distance to the site of Work.

8.4.4 Partial payments shall be made only if the Engineer finds that:

8.4.4.1 The Contractor has submitted bills of sale for the materials or otherwise demonstrates clear title to such materials.

8.4.4.2 The materials are insured for their full replacement value to the benefit of the Department against theft, fire, damages incurred in transportation to the site, and other hazards.

8.4.4.3 The materials are not subject to deterioration.

8.4.4.4 In case of materials stored off the project site, the materials are not commingled with other materials not to be incorporated into the project.

8.5 PROMPT PAYMENT §3-125-23 HAR

8.5.1 Any money paid to a Contractor for work performed by a subcontractor or for unpaid material invoice shall be disbursed to such subcontractors and material suppliers within ten (10) days after receipt of the money from the Department, provided that there are no bona fide disputes, and

8.5.2 Upon final payment to the Contractor, full payment to all subcontractors and material suppliers shall be made within ten (10) days after receipt of the money, provided there are no bona fide disputes over the subcontractor's or material supplier's performance under the subcontract.

8.5.3 **Bona Fide Disputes** - The existence of a bona fide dispute with a subcontractor or material supplier shall not release the Contractor of its prompt payment obligations as to all sums due that are not directly affected by such dispute.

8.5.4 **Filing Non-Payment Complaint** - Subcontractors and material suppliers may file in writing a complaint with the Comptroller regarding non-payment by the Contractor. Such complaint shall include:

8.5.4.1 The amount past due for work performed and already paid for by the Department;

8.5.4.2 That all the terms, conditions or requirements of its subcontract have been met; and

8.5.4.3 That no bona fide dispute over its performance exists. The Department will investigate the validity of the complaint.

8.5.5 The Department may withhold from future progress payments amounts to cover any sums paid to the Contractor for work performed by a subcontractor if the Department finds that the subcontractor complaint regarding non-payment by the Contractor has merit.

8.5.6 If the Engineer determines that the Contractor failed to make prompt payment required to a subcontractor or material supplier with whom it has no bona fide dispute, the Engineer shall inform the Contractor of the findings and request the Contractor make payment accordingly. If the Contractor does not act promptly, the Engineer shall take appropriate action as allowed under this contract and / or refer the matter to the Contractor Licensing Board for appropriate action under Section 444-17 Hawaii Revised Statutes regarding the Revocation, Suspension and Renewal of (Contractor) Licenses and/or initiate a petition for debarment of the Contractor from bidding on other State jobs.

8.6 RETAINAGE

8.6.1 The Department will retain five percent (5%) of the total amount of progress and / or partial payments until after completion of the entire contract in an acceptable manner at which time this balance, less any previous payments, will be certified and paid to the Contractor. After fifty percent (50%) of the work is completed, and if progress is satisfactory, the Engineer at its sole discretion may elect not to withhold further retainage. If progress is not satisfactory, the Department may continue to withhold as retainage sums not exceeding five percent (5%) of the amount earned.

8.6.2 The retainage shall not include sums deducted as liquidated damages from moneys due or that may become due the contractor under the contract.

8.6.3 Contractor may withdraw from time to time the whole or any portion of the sum retained after endorsing over to the Department and depositing with the Department any general obligation bond of the State or its political subdivisions suitable to the Department but in no case with a face value less than the value established by law of the amount to be withdrawn. The Department may sell the bond and use the proceeds therefrom in the same way as it may use monies directly retained from progress payments or the final payment.

8.7 WARRANTY OF CLEAR TITLE - The Contractor warrants and guarantees that all work and materials covered by progress or partial payments made thereon shall be free and clear of all liens, claims, security interests or encumbrances, and shall become the sole property of the Department. This provision shall not, however, be construed as an acceptance of the work nor shall it be construed as relieving the Contractor from the sole responsibility for all materials and work upon which payments have been made or the restoration of any damaged work, or as waiving the right of the Department to require the fulfillment of all the items of the contract.

8.8 FINAL PAYMENT

8.8.1 Upon final settlement, the final payment amount, less all previous payments and less any sums that may have been deducted in accordance with the provisions of the contract, will be paid to the Contractor, provided the Contractor has submitted a Tax Clearance Certificate from the Department of Taxation and the Internal Revenue Service to the effect that all taxes levied or accrued under Federal and State Statutes against the contractor have been paid.

8.8.2 Sums necessary to meet any claims of any kind by the State may be retained from the sums due the Contractor until said claims have been fully and completely discharged or otherwise satisfied.

8.9 CLAIMS ARISING OUT OF PAYMENT FOR REQUIRED WORK - If the Contractor disputes any determination made by the Engineer regarding the amount of work satisfactorily completed, or the value thereof, or the manner in which payment therefore is made or calculated, it shall notify the Engineer in writing of the specific facts supporting the Contractor's position. Such notice shall be delivered to the Engineer no later than thirty (30) days after the Contractor has been tendered payment for the subject work, or, if no payment has been tendered, not later than fifty (50) days after it has submitted the Monthly Payment Application required under Section 8.4 PROGRESS AND/OR PARTIAL PAYMENTS herein to the Engineer for the work that is the subject of the dispute. The delivery of the written notice cannot be waived and shall be a condition precedent to the filing of the claim. No claim for additional compensation for extra work or change work shall be allowed under this provision, unless the notice requirements of Article 4 SCOPE OF WORK have been followed. Acceptance of partial payment of a Monthly Payment Application amount shall not be deemed a waiver of the right to make a claim described herein provided the notice provisions are followed. The existence of or filing of a payment claim herein shall not relieve the Contractor of its duty to continue with the performance of the contract in full compliance with the directions of the Engineer. Any notice of claim disputing the final payment made pursuant to Section 8.8 FINAL PAYMENT must be submitted in writing not later than thirty (30) days after final payment that is identified as such has been tendered to the Contractor.

END ARTICLE 8

THIS PAGE LEFT BLANK

APPENDIX

The forms included in this appendix are for general reference and are subject change. To obtain the most current form or information about the form, contact the Public Works Division, 4th Floor of the Kalanimoku Building, Room 426, 1151 Punchbowl Street or mailed to the Public Works Division, P.O. Box 119, Honolulu, Hawaii 96810.

THIS PAGE LEFT BLANK

APPENDIX

(SUBSTITUTION REQUEST)

DATE

Public Works Administrator
Public Works Division
Department of Accounting and General Services
P.O. Box 119
Honolulu, Hawaii 96810 - 0119

SUBJECT: SUBSTITUTION REQUEST
PROJECT TITLE: _____
_____
D.A.G.S. JOB NO. _____

In accordance with the requirements of Section 00800 SPECIAL CONDITIONS, enclosed are three (3) sets of technical brochures and statement of variances for your review and approval for the item(s) shown below.

SECTION/ ITEM	SPECIFIED BRAND	SUBSTITUTE OR ALTERNATE BRAND	VARIANT[3] / FEATURES

[I/Company certify/certifies][4] that the substitution request of the above item(s) has no other variant features.

_____
SIGNATURE

NOTE:
1. *Use own letterhead*
2. *Submit one (1) original and two (2) copies*
3. *If no variant features indicate "None"*
4. *Fill in appropriate entity*

THIS PAGE LEFT BLANK

APPENDIX

(NAME OF CORPORATION)

I, _____ , Secretary of _____ Corporation, a corporation, do hereby certify that the following is a full, true and correct copy of a resolution duly adopted by the Board of Directors of said Corporation, at its meeting duly called and held at the office of the Corporation, _____ _____ Street, _____ , _____ , on the day of _____ _____ , at which a quorum was present and acting throughout; and that said resolution has not been modified, amended or rescinded and continues in full force and effect:

> "RESOLVED that any individual at the time holding the position of President or Vice Present, be, and each of them hereby is, authorized to execute on behalf of the Corporation any bid, proposal or contract for the sale or rental of the products of the Corporation or for services to be performed by the Corporation, and to execute any bond required by any such bid, proposal or contract with the United States Government or the State of Hawaii or the City and County of Honolulu, or any County or Municipal Government of said State, or any department or subdivision of any of them."

IN WITNESS WHEREOF, I have hereunto set my hand and affixed the corporate seal of said _____ _____ Corporation this _____ day of _____.

_____
Secretary

(Names and Addresses of :)
President
Vice President
Secretary

THIS PAGE LEFT BLANK

APPENDIX

(CONTRACT)

THIS CONTRACT, made as of the _____ day _____, 2000, by and between the State of Hawaii, hereinafter referred to as the "State", acting by and through its Comptroller, and _____ _____ of _____ _____ a duly licensed contractor in the State of Hawaii, hereinafter referred to as the "Contractor",

WITNESSETH THAT:

WHEREAS, the written proposal of the Contractor has been accepted by the State as the lowest responsible bid submitted pursuant to a call for bids for the work herein described;

NOW THEREFORE, in consideration of the mutual promises hereinafter set forth, the parties agree as follows:

A. **Scope of Work.** The Contractor shall furnish, in accordance with the Contract Documents, all the labor, materials, machinery, tools, superintendence, transportation, and other construction accessories, services and facilities necessary to construct and complete, at its own risk and expense, the following described work or so much of said work as shall be required by the Comptroller.

_____
_____
_____
_____
_____
_____
_____

D.A.G.S. JOB NO.

B. **Time of Completion.** The work under this Contract shall be fully completed by the Contractor within _____ working days after receipt of the Notice to Proceed from the Comptroller.

Liquidated damages in the sum stated in the SPECIAL CONDITIONS will be deducted from the Contractor's final payment if the work is not completed prior to the expiration of the time limit specified above or of any time extension granted to the Contractor by the State.

C. **Compensation.** The State shall pay the Contractor for the performance of the work specified under this Contract, the Maximum sum of $_____, this figure being the amount set forth in the Contractor's proposal, subject to such additions and deductions as provided in the GENERAL CONDITIONS of this Contract. Extras may be allowed in addition to said sum, but shall not exceed $_____. All payments shall be made in the manner and at the times indicated in the Contract Documents.

It is understood and agreed that the compensation paid by the State to the Contractor shall include all expenses incurred by the Contractor for all loss or damage arising out of the nature of the work, from the action of the elements, or from any delay or unforeseen obstruction or difficulty encountered in the prosecution of the Work; for all risks of every description connected with the Work; and for all expenses incurred by or in consequence of the suspension or discontinuance of the work, except as set forth in the GENERAL CONDITIONS.

It is further agreed by the parties that any portion of the Contract price payable to the Contractor out of federal funds shall be paid to the Contractor only when such federal funds are so received, and this Contract shall not be construed as binding the State to pay said portion out of any fund other than those which are received from the Federal government.

D. **Guaranty of Work.** The Contractor agrees to guarantee all work under this Contract for the period(s) stipulated in the Contract Documents from the Project Acceptance Date.

If any unsatisfactory condition or damage develops within the time of this guaranty due to materials or workmanship that are defective, inferior, or not in accordance with the Contract, the Contractor shall, when notified by the State, immediately place such guaranteed work in a condition satisfactory to the State and make repairs of all damage to the buildings, equipment and grounds made necessary in fulfillment of the guaranty. Everything necessary for the fulfillment of any guaranty shall be done without any expense to the State. It is understood that the performance and payment bond furnished by the Contractor under this Contract may be used to secure performance of Contractor's guaranty.

E. **Contract Documents.** It is understood and agreed that the following documents, and any amendments or addenda thereto, comprise this Contract and are fully a part of this Contract as though attached hereto or set forth at length herein: (1) Contractor's accepted proposal; (2) GENERAL CONDITIONS; (3) Drawings; (4) Specifications, including the Notice to Contractors, Special Notice to Bidders and SPECIAL CONDITIONS, if any; (5) Combination Performance and Labor and Material Payment Bond; and (6) This Contract agreement.

F. **Entire Agreement.** This contract is the entire agreement between the parties, and no alterations, changes, or additions thereto shall be made, except in writing approved by the parties.

IN WITNESS WHEREOF, the parties have executed this Contract the day and year first above written.

STATE OF HAWAII

By _____
Its Comptroller

By _____
Seal

STATE OF _____)
: SS
_____ COUNTY OF _____)

On this _____ day of _____, before me appeared _____ _____ and _____ to me known to be the person(s) described in and, who, being by me duly sworn, did say that he/she/they is/are _____ and _____ _____ of _____ the Contractor named in the foregoing instrument, and that he/she/they is/are authorized to sign said instrument in behalf of the Contractor, and acknowledges that he/she/they executed said instrument as the free act and deed of the Contractor.

(Notary Seal) Notary Public _____

State of _____

My commission expires: _____

APPROVED AS TO FORM:

_____
Deputy Attorney General

APPROVAL CONTINGENT UPON
CERTIFICATION OF FUNDS

THIS PAGE LEFT BLANK

APPENDIX

(SURETY [BID] [PROPOSAL] BOND)

Bond No. _____

KNOW TO ALL BY THESE PRESENTS:

That we, _____(full name or legal title of offeror)_____ ,

as Offeror, hereinafter called Principal, and _____(name of bonding company)_____ ,
as Surety, hereinafter called Surety, a corporation authorized to transact business as a Surety in the State of Hawaii, are held and firmly bound unto the State of Hawaii, as owner, hereinafter called Owner, in the penal sum of ___(Required amount of bid security)_DOLLARS ($ _____), lawful money of the United States of America, for the payment of which sum well and truly to be made, the said Principal and the said Surety bind ourselves, our heirs, executors, administrators, successors and assigns, jointly and severally, firmly by these presents.

WHEREAS:

The Principal has submitted an offer for _____
_____
_____
_____
(project by number and brief description)

NOW, THEREFORE:

The condition of this obligation is such that if the Owner shall reject said offer, or in the alternate, accept the offer of the Principal and the Principal shall enter into a Contract with the Owner in accordance with the terms of such offer, and give such bond or bonds as may be specified in the solicitation or Contract Documents with good and sufficient surety for the faithful performance of such Contract and for the prompt payment of labor and material furnished in the prosecution thereof as specified in the solicitation then this obligation shall be null and void, otherwise to remain in full force and effect.

Signed this _____ Day of _____.

(Seal) [Name of Principal (Contractor)]
Signature _____
Title _____

[Name of Surety]
Signature _____
Title _____

THIS PAGE LEFT BLANK

APPENDIX

(PERFORMANCE BOND - SURETY)

KNOW TO ALL BY THESE PRESENTS:

That ___(full legal name and street address of contractor) , as Contractor, hereinafter called Principal, and _(name and street address of bonding company)____, as Surety, hereinafter called Surety, a corporation(s) authorized to transact business as a surety in the State of Hawaii, are held and firmly bound unto the State of Hawaii, its successors and assigns, hereinafter called Obligee, in the amount of _____**DOLLARS ($ _____)**, to which payment Principal and Surety bind themselves, their heirs, executors, administrators, successors and assigns, jointly and severally, firmly by these presents.

WHEREAS, the above-bound Principal has entered into a Contract with Obligee dated _____ ___ for:

_____

_____

D.A.G.S. JOB NO.

hereinafter called Contract, which Contract is incorporated herein by reference and made a part hereof.

NOW, THEREFORE, the condition of this obligation is such that:

If the Principal shall promptly and faithfully perform, and fully complete the Contract in strict accordance with the terms of the Contract as said Contract may be modified or amended from time to time; then this obligation shall be void; otherwise to remain in full force and effect.

Surety to this Bond hereby stipulates and agrees that no changes, extensions of time, alterations, or additions to the terms of the Contract, including the work to be performed thereunder, and the specifications or drawings accompanying same, shall in any way affect its obligation on this bond, and it does hereby waive notice of any such changes, extensions of time, alterations, or additions, and agrees that they shall become part of the Contract.

In the event of Default by the Principal, of the obligations under the Contract, then after written Notice of Default from the Obligee to the Surety and the Principal and subject to the limitation of the penal sum of this bond, Surety shall remedy the Default, or take over the work to be performed under the Contract and complete such work, or pay moneys to the Obligee in satisfaction of the surety's performance obligation on this bond.

Signed this _____ day of _____.

(Seal) [Name of Principal (Contractor)]
Signature _____
Title _____

APPROVED AS TO FORM: (Seal)

[Name of Surety]
Signature _____

_____
Deputy Attorney General Title _____

*ALL SIGNATURES MUST BE ACKNOWLEDGED BY A NOTARY PUBLIC

THIS PAGE LEFT BLANK

APPENDIX

(PERFORMANCE BOND - CONTRACTOR)

KNOW TO ALL BY THESE PRESENTS:

That we ___(full legal name and street address of Contractor)___ , as Contractor, hereinafter called Contractor, is held and firmly bound unto the State of Hawaii its successors and assigns, as Obligee, hereinafter called Obligee, in the amount of ___(Dollar amount of contract)__, DOLLARS ($_____), lawful money of the United States of America, for the payment of which to the said Obligee, well and truly to be made, Contractor binds itself, its heirs, executors, administrators, successors and assigns, firmly by these presents. Said amount as evidenced by:

- ☐ Legal tender;
- ☐ Share Certificate unconditionally assigned to or made payable at sight to
  _____ ;
  Description _____ ;
- ☐ Certificate of Deposit, No. _____,
  dated _____, issued by _____ ,
  drawn on _____ , a bank, savings institution or credit union insured by the Federal Deposit Insurance Corporation or the National Credit Union Administration, payable at sight or conditionally assigned to _____
  _____ ;
- ☐ Cashier's Check No. _____ ,
  dated _____, issued by _____ ,
  drawn on _____ , a bank, savings institution or credit union insured by the Federal Deposit Insurance Corporation or the National Credit Union Administration, payable at sight or conditionally assigned to _____
  _____ ;
- ☐ Teller's Check No. _____ ,
  dated _____, issued by _____ ,
  drawn on _____ , a bank, savings institution or credit union insured by the Federal Deposit Insurance Corporation or the National Credit Union Administration, payable at sight or conditionally assigned to _____
  _____ ;
- ☐ Treasurer's Check No. _____ ,
  dated _____, issued by _____ ,
  drawn on _____ , a bank, savings institution or credit union insured by the Federal Deposit Insurance Corporation or the National Credit Union Administration, payable at sight or conditionally assigned to _____
  _____ ;
- ☐ Official Check No. _____ ,
  dated _____, issued by _____ ,
  drawn on _____ , a bank, savings institution or credit union insured by the Federal Deposit Insurance Corporation or the National Credit Union Administration, payable at sight or conditionally assigned to _____
  _____ ;
- ☐ Certified Check No. _____ ,
  dated _____, accepted by a bank, savings institution or credit union insured by the Federal Deposit Insurance Corporation or the National Credit Union Administration, payable at sight or unconditionally assigned to _____
  _____ ;

WHEREAS:

The Contractor has by written agreement dated _____ entered into a contract with Obligee for the following Project:

_____

_____

hereinafter called Contract, which Contract is incorporated herein by reference and made a part hereof.

NOW, THEREFORE,

The condition of this obligation is such that, if Contractor shall promptly and faithfully perform the Contract in accordance with, in all respects, the stipulations, agreements, covenants and conditions of the Contract as it now exists or may be modified according to its terms, and shall deliver the Project to the Obligee, or to its successors or assigns, fully completed as in the Contract specified and free from all liens and claims and without further cost, expense or charge to the Obligee, its officers, agents, successors or assigns, free and harmless from all suits or actions of every nature and kind which may be brought for or on account of any injury or damage, direct or indirect, arising or growing out of the doing of said work or the repair or maintenance thereof or the manner of doing the same or the neglect of the Contractor or its agents or servants or the improper performance of the Contract by the Contractor or its agents or servants or from any other cause, then this obligation shall be void; otherwise it shall be and remain in full force and effect.

AND IT IS HEREBY STIPULATED AND AGREED that suit on this bond may be brought before a court of competent jurisdiction without a jury, and that the sum or sums specified in the said Contract as liquidated damages, if any, shall be forfeited to the Obligee, its successors or assigns, in the event of a breach of any, or all, or any part of, the covenants, agreements, conditions, or stipulations contained in the Contract or in this bond in accordance with the terms thereof.

The amount of this bond may be reduced by and to the extent of any payment or payments made in good faith hereunder.

Signed this _____ day of _____.

(Seal) [Name of Principal (Contractor)]
Signature _____
Title _____

*ALL SIGNATURES MUST BE ACKNOWLEDGED BY A NOTARY PUBLIC

APPENDIX

(LABOR AND MATERIAL PAYMENT BOND - SURETY)

KNOW TO ALL BY THESE PRESENTS:

That ___(full legal name and street address of contractor)_, as Contractor, hereinafter called Principal, and _(name and street address of bonding company)____, as Surety, hereinafter called Surety, a corporation(s) authorized to transact business as a surety in the State of Hawaii, are held and firmly bound unto the State of Hawaii, its successors and assigns, hereinafter called Obligee, in the amount of _____**DOLLARS ($ _____)**, to which payment Principal and Surety bind themselves, their heirs, executors, administrators, successors and assigns, jointly and severally, firmly by these presents.

WHEREAS, the above-bound Principal has entered into a Contract with Obligee dated _____ _____ for:

_____**D.A.G.S. JOB NO.**_____

hereinafter called Contract, which Contract is incorporated herein by reference and made a part hereof.

NOW, THEREFORE, the condition of this obligation is such that if the Principal shall promptly make payment to any Claimant, as hereinafter defined, for all labor and materials supplied to the Principal for use in the performance of the Contract, then this Obligation shall be void; otherwise to remain in full force and effect.

1. Surety to this Bond hereby stipulates and agrees that no changes, extensions of time, alterations, or additions to the terms of the Contract, including the work to be performed thereunder, and the specifications or drawings accompanying same, shall in any way affect its obligation on this bond, and it does hereby waive notice of any such changes, extensions of time, alterations, or additions, and agrees that they shall become part of the Contract.

2. A "Claimant" shall be defined herein as any person who has furnished labor or materials to the Principal for the work provided in the Contract.

Every Claimant who has not been paid amounts due for labor and materials furnished for work provided in the Contract may institute an action against the Principal and its Surety on this bond at the time and in the manner prescribed in Section 103D-324, Hawaii Revised Statutes, and have the rights and claims adjudicated in the action, and judgment rendered thereon; subject to the Obligee's priority on this bond. If the full amount of the liability of the Surety on the bond is insufficient to pay the full amount of the claims, then after paying the full amount due the Obligee, the remainder shall be distributed pro rata among the claimants.

Signed this _____ day of _____.

(Seal) [Name of Principal (Contractor)]
Signature _____
Title _____

APPROVED AS TO FORM: (Seal) [Name of Surety]
_____ Signature _____
Deputy Attorney General Title _____

*ALL SIGNATURES MUST BE ACKNOWLEDGED BY A NOTARY PUBLIC

THIS PAGE LEFT BLANK

APPENDIX

(LABOR AND MATERIAL PAYMENT BOND - CONTRACTOR)

KNOW TO ALL BY THESE PRESENTS:

That we ___(full legal name and street address of Contractor)___ , as Contractor, hereinafter called Contractor, is held and firmly bound unto the State of Hawaii its successors and assigns, as Obligee, hereinafter called Obligee, in the amount of ___(Dollar amount of contract)___, DOLLARS ($_____), lawful money of the United States of America, for the payment of which to the said Obligee, well and truly to be made, Contractor binds itself, its heirs, executors, administrators, successors and assigns, firmly by these presents. Said amount as evidenced by:

Legal tender;

☐ Share Certificate unconditionally assigned to or made payable at sight to
_____ ;
Description _____ ;

☐ Certificate of Deposit, No. _____,
dated _____, issued by _____ ,
drawn on _____ , a bank, savings institution or credit union insured by the Federal Deposit Insurance Corporation or the National Credit Union Administration, payable at sight or conditionally assigned to _____
_____ ;

☐ Cashier's Check No. _____ ,
dated _____, issued by _____ ,
drawn on _____ , a bank, savings institution or credit union insured by the Federal Deposit Insurance Corporation or the National Credit Union Administration, payable at sight or conditionally assigned to _____
_____ ;

☐ Teller's Check No. _____ ,
dated _____, issued by _____ ,
drawn on _____ , a bank, savings institution or credit union insured by the Federal Deposit Insurance Corporation or the National Credit Union Administration, payable at sight or conditionally assigned to _____
_____ ;

☐ Treasurer's Check No. _____ ,
dated _____, issued by _____ ,
drawn on _____ , a bank, savings institution or credit union insured by the Federal Deposit Insurance Corporation or the National Credit Union Administration, payable at sight or conditionally assigned to _____
_____ ;

☐ Official Check No. _____ ,
dated _____, issued by _____ ,
drawn on _____ , a bank, savings institution or credit union insured by the Federal Deposit Insurance Corporation or the National Credit Union Administration, payable at sight or conditionally assigned to _____
_____ ;

☐ Certified Check No. _____ ,
dated _____, accepted by a bank, savings institution or credit union insured by the Federal Deposit Insurance Corporation or the National Credit Union Administration, payable at sight or unconditionally assigned to _____
_____ ;

WHEREAS:

The Contractor has by written agreement dated _____ entered into a contract with Obligee for the following Project:

_____

_____

hereinafter called Contract, which Contract is incorporated herein by reference and made a part hereof.

NOW, THEREFORE,

The condition of this obligation is such that, if the Contractor shall promptly and faithfully perform the Contract in accordance with, in all respects, the stipulations, agreements, covenants and conditions of the Contract as it now exists or may be modified according to its terms, free from all liens and claims and without further cost, expense or charge to the Obligee, its officers, agents, successors or assigns, free and harmless from all suits or actions of every nature and kind which may be brought for or on account of any injury or damage, direct or indirect, arising or growing out of the doing of said work or the repair or maintenance thereof or the manner of doing the same or the neglect of the Contractor or its agents or servants or the improper performance of the Contract by the Contractor or its agents or servants or from any other cause, and shall promptly pay all persons supplying labor and materials for the performance of the Contract, then this obligation shall be void; otherwise it shall be and remain in full force and effect.

AND IT IS HEREBY STIPULATED AND AGREED that suit on this bond may be brought before a court of competent jurisdiction without a jury, and that the sum or sums specified in the said Contract as liquidated damages, if any, shall be forfeited to the Obligee, its successors or assigns, in the event of a breach of any, or all, or any part of, the covenants, agreements, conditions, or stipulations contained in the Contract or in this bond in accordance with the terms thereof.

AND IT IS HEREBY STIPULATED AND AGREED that this bond shall inure to the benefit of any and all persons entitled to file claims for labor performed or materials furnished in said work so as to give any and all such persons a right of action as contemplated by Sections 103D-324(d) and 103D-324(e), Hawaii Revised Statutes.

The amount of this bond shall be reduced by and to the extent of any payment or payments made in good faith hereunder, inclusive of the payment of mechanics' liens which may be filed of record against the Project, whether or not claim for the amount of such lien be presented under and against this bond.

Signed this _____ day of _____.

(Seal) [Name of Principal (Contractor)]
Signature _____
Title _____

*ALL SIGNATURES MUST BE ACKNOWLEDGED BY A NOTARY PUBLIC

APPENDIX

CONTRACTOR ACKNOWLEDGMENT

(FOR USE WITH PERFORMANCE AND PAYMENT BONDS)

STATE OF _____)
: SS
_____ COUNTY OF _____)

On this _____ day of _____, before me appeared _____ _____ and _____ to me known to be the person(s) described in and, who, being by me duly sworn, did say that he/she/they is/are _____ and _____ _____ of _____ the Contractor named in the foregoing instrument, and that he/she/they is/are authorized to sign said instrument in behalf of the Contractor, and acknowledges that he/she/they executed said instrument as the free act and deed of the Contractor.

(Notary Seal) Notary Public _____

State of _____

My commission expires: _____

SURETY ACKNOWLEDGMENT

(FOR USE WITH SURETY PERFORMANCE AND PAYMENT BONDS)

INDIVIDUAL ATTORNEY-IN-FACT ACTING FOR CORPORATION

STATE OF _____)
: SS
_____ COUNTY OF _____)

On this _____ day of _____ , before me personally came _____ to me known to be the person described in and, who, being by me, did depose and say that _____ resides in _____ ; that __ _____ is the Attorney-in-fact of _____ , the corporation described in and which executed the attached instrument; that _____ knows corporate seal of the said corporation; and that the seal affixed to the said instrument is such corporate seal; and that it was so affixed by order of the Board of Directors of the said corporation; and that _____ signed _____ _____ name thereto by like order.

(Notary Seal) Notary Public _____

State of _____

My commission expires: _____

THIS PAGE LEFT BLANK

APPENDIX

[STATE PROCUREMENT OFFICE]

(CERTIFICATION OF RECYCLED CONTENT)

Solicitation No.: _____

Title: _____

Issuance Date: _____

Opening Date: _____

Item No.	Product Name	Product Description	Manufacturer	Post-Consumer Recovered Material Content*	Recovered Material Content*

*Post-consumer recovered material and recovered material content, as defined in §3-124-21, HAR, measured as percentage of total product wight. Attach manufacturer's specifications or certification, as required by §3-124-24(d), HAR. Recycled content measurements to be used for bid evaluation. If more space is required for product information, additional sheets may be attached.

I DECLARE THAT THE RECYCLED CONTENT HAS BEEN EXAMINED BY ME AND IS TO THE BEST OF MY KNOWLEDGE AND BELIEF, TRUE AND CORRECT.

Authorized Representative

Company: _____ Name: _____

Name: _____ Title: _____

Address: _____ Signature: _____

Telephone: _____ Date: _____

THIS PAGE LEFT BLANK

APPENDIX

(VALUE ENGINEERING CHANGE PROPOSAL)

	VECP NO.	DATE:
["STATE" OR "NAME OF COUNTY"] PROJECT TITLE:	PROJECT NO:	CONTRACT NO.
	CONTRACTOR:	

A. CHANGES:
The following changes are to be performed in accordance with all contract stipulations and covenants (Specifications, Drawings, SPECIAL CONDITIONS, etc.):

B. CONTRACTOR'S QUOTATION:
The changes included under Part A above will be performed at a contract price decrease of $ _____ _____ In accordance with all terms of the contract documents. Six copies of our cost breakdown are attached herewith. We are aware that this value engineering change proposal must be approved by the State of Hawaii in the designated space below and that no work is to be performed until an approved change order has been given us. In case of rejection of this proposal by the State of Hawaii, we will continue all work in accordance with the existing contract terms.

_____ _____
NAME TITLE

_____ _____
SIGNATURE DATE

C. STATEMENT OF FUNDS:

Original contract Price . . . . . $ _____
Amended Contract Price . . . . . $ _____
New Contingency $ _____

D. SUMMARY DESCRIPTION AND POTENTIAL IMPACTS OF THE PROPOSED CHANGES:

E. TIME EXTENSION:

F. VALIDATION OF CHANGE ORDER Recommend for approval	G. REJECTION OF CHANGE ORDER
_____ CONSTRUCTION ENGINEER Approved:	_____ CONSTRUCTION ENGINEER Disapproved:
_____ PROCUREMENT OFFICER	_____ PROCUREMENT OFFICER
_____ DATE	_____ DATE

Reasons for rejection:

VALUE ENGINEERING CHANGE PROPOSAL
(Contractor Summary Sheet)

From	_____	Date	_____
To	_____	VECP No.	_____
Project	_____	Contract No	_____

Location _____

Summary of Change (Description - compare advantages and disadvantages, include all information required by the contract clauses and section §3-132-4for value engineering change proposals)

Before (sketch, when applicable) After

ESTIMATED COST SUMMARY (Costs shall be estimated in accordance with the change provisions contained in the General Clause of the contract. attach Cost Estimate form, for detailed estimate whenever applicable.)

	Qty	Unit Cost	Totals
A. Original	_____	_____	_____
B. Proposed	_____	_____	_____
C. Gross Savings(A-B)			_____
D. Contractor's Implementing Cost			_____
E. Total Estimated Decrease (C-D			_____
F. State's Implementing Cost		_____	
G. Difference (E-F)		_____	
H. ½ difference (E-F*1/2)			_____
I. Reduction in Contract Price (E-H)			_____

DATE BY WHICH A CHANGE ORDER MUST BE
ISSUED SO AS TO OBTAIN MAXIMUM COST REDUCTION . . . . . _____
Date

Contractor's Representative

_____
Name Signature Date

Received By: STATE OF HAWAII

_____
Name Signature Date

VALUE ENGINEERING CHANGE PROPOSAL
(Contractor Required Information)

From _____ Date _____
To _____ VECP No. _____
Project _____ Contract No _____
Location _____

INFORMATION REQUIRED OF THE CONTRACTOR (If answer to any of the following questions is "YES", explain in the remarks below

		YES	NO
1	Does this proposal change affect the time of completion of the contract as stated in the General Conditions?		
2	Has the contractor submitted this proposed change previously to this office or any other government agency?		
3	Does this change affect other costs to the government, such as government -furnished property or costs of contract -related items?		
4	Does this proposed change increase the maintenance or operation costs of original or proposed items?		
5	Is a subcontractor involved in this proposed change to the contract?		
6	Does the Contractor intend to restrict the government's right to use any data described in this proposed change?		
7	Does this proposed change involve the use of proprietary materials?		

CHANGES OR REVISIONS TO DRAWINGS AND SPECIFICATIONS (Attach applicable contract drawings and specifications, including Contractor's or shop drawings of literature with all changes marked on the drawings and specifications.

REMARKS

Contractor's Representative

Name Signature Date

Received By: STATE OF HAWAII

Name Signature Date

APPENDIX

(ESTIMATE FOR FIELD ORDER OR BULLETIN)

CONTRACTOR'S ESTIMATE FOR CHANGE Date _____

Project _____

DAGS Job No: _____ Contractor / Sub _____

Reference Bulletin No: _____ Field Order _____

Description _____

MATERIALS

Description	Unit	Unit Price	Subtotal		
			0.00		
			0.00		
			0.00		
			0.00		
			0.00		
TOTAL FOR MATERIALS				$0.00	01

LABOR

Classification	Hrs	WAGES Hour Rate	FRINGE* Fringe Rate	(Fringe) x Hrs Subtotal	(Wage) x Hrs Subtotal
	0.0	0.00	0.00	0.00	0.00
	0.0	0.00	0.00	0.00	0.00
	0.0	0.00	0.00	0.00	0.00
	0.0	0.00	0.00	0.00	0.00
	0.0	0.00	0.00	0.00	0.00

SUBTOTAL Fringe Rate x Hours		02
SUBTOTAL Wage Rate x Hours	$0.00	03

*If requested, fringe benefits shall be identified separately under each classification

TOTAL FOR LABOR - Wages and Fringe (2 + 3)				$0.00	04
SUBTOTAL - Materials and Labor (1 + 4)				$0.00	05
Overhead and Profit at 15% (maximum)	15	%	of (5)	$0.00	06
Insurance and Taxes	0	%	of (3)	$0.00	07
Overhead for Insurance and Taxes 6%	6	%	of (7)	$0.00	08
TOTAL - MATERIALS and LABOR (5 + 6 + 7 + 8)				$0.00	09

EQUIPMENT / REIMBURSABLE COSTS (per diem, air far, etc.)

Classification	Unit/Hours	Unit	Rate	Subtotal		
				0.00		
				0.00		
				0.00		
TOTAL FOR EQUIPMENT / REIMBURSABLE COSTS					$0.00	10

SUBCONTRACTORS

NAME	Amount	7% Markup	Subtotal		
	0.00	0.00	0.00		
	0.00	0.00	0.00		
	0.00	0.00	0.00		
TOTAL FOR SUBCONTRACTORS				$0.00	11

TOTAL - MATERIALS, LABOR and EQUIPMENT / REIMBURSABLE (9 + 10 + 11)				$0.00	12
Bond Fee (if applicable) 1% maximum	0	%	on (12)	$0.00	13
Gross Income Tax (Less Subcontractor's Cost) (11)	4.16	%	on (12 + 13)	$0.00	14
TOTAL FOR CHANGE ORDER (12 + 13 + 14)				$0.00	
			SAY	$ 0	

THIS PAGE LEFT BLANK

APPENDIX

(CHANGE ORDER FORM)

CHANGE ORDER NO. _____ PROJECT TITLE: _____

DATE _____ DAGS JOB NO: _____ CONTRACT _____

ISSUED BY THE PUBLIC WORKS DIVISION CONTRACTOR: _____

A. CHANGES

THE FOLLOWING CHANGES ARE TO BE PERFORMED IN ACCORDANCE WITH ALL CONTRACT STIPULATIONS (SPECIFICATIONS, DRAWINGS, SPECIAL CONDITIONS, ETC.)

B. CONTRACTOR'S QUOTATION

THE CHANGES DESCRIBED IN A ABOVE WILL BE PERFORMED AT

A CONTRACT PRICE ☐ INCREASE ☐ DECREASE OF $ _____ AND A CONTRACT TIME ☐ EXTENSION ☐ REDUCTION OF _____ DAYS.

NAME _____ TITLE _____ DATE _____

C. STATEMENT OF CONTRACT FUNDS & CONTRACT TIME

				NOTICE TO PROCEED DATE	_____	
ORIGINAL CONTRACT PRICE	_____	ORIGINAL EXTRAS	_____	ORIGINAL CONTRACT TIME	_____	WD
PREVIOUS ADJUSTED CONTRACT PRICE	_____	PREVIOUS BALANCE OF EXTRAS	_____	ORIGINAL COMPLETION DATE	_____	
AMOUNT THIS CHANGE		AMENDMENT	_____	PREVIOUS TIME EXTENSIONS ALLOWED	_____	WD
PLUS	_____	PLUS	_____	TIME EXTENSIONS ALLOWED THIS CHANGE	_____	WD
MINUS	_____	MINUS	_____			
NEW ADJUSTED CONTRACT PRICE	_____	NEW BALANCE OF EXTRAS	_____	NEW CONTRACT COMPLETION DATE	_____	

D. VALIDATION OF CHANGE ORDER

APPROVAL RECOMMENDED APPROVED:

_____ _____

INSPECTION BRANCH CHIEF/ DISTRICT ENGINEER DATE PUBLIC WORKS ADMINISTRATOR DATE

DISTRIBUTION

OFFICE -ORIGINAL INSPECTION BRANCH - 1 USER AGENCY - 1
CONTRACTOR - 1

THIS PAGE LEFT BLANK

APPENDIX

(FIELD ORDER FORM)

F I E L D O R D E R

DATE _____

FIELD ORDER No. _____

TO _____ **PROJECT** _____

_____ _____

_____ **DAGS Job No**: _____

Work shall be performed in accordance with this FIELD ORDER and applicable provisions of the Contract Documents.

To expedite the Work and avoid delays, proceed with this work promptly.

DESCRIPTION OF WORK TO BE PERFORMED OR DELETED:

ATTACHMENTS:

CONDITIONS AND TERMS:

☐ Work is considered a MINOR CHANGE and shall be performed at no additional cost or time to the Department

☐ Provide a cost proposal for the work. Submit the proposal in accordance with the General Conditions.

☐ Perform the Work under the Force Account Provisions of the General Conditions.

☐ Work is subject to an adjustment to contract price and / or contract time as follows.

☐ Fixed ☐ Estimated ☐ Maximum Change in Contract Sum. Add / Deduct $ _____

☐ Fixed ☐ Estimated ☐ Maximum Change in Contract Time. Add _____ Working / Calendar Days

ISSUED **RECEIVED**

BY _____ BY _____

Engineer Date Contractor Authorized Representative Date

Copy: Field File Consultant

Public Works Administrator

DPW Form